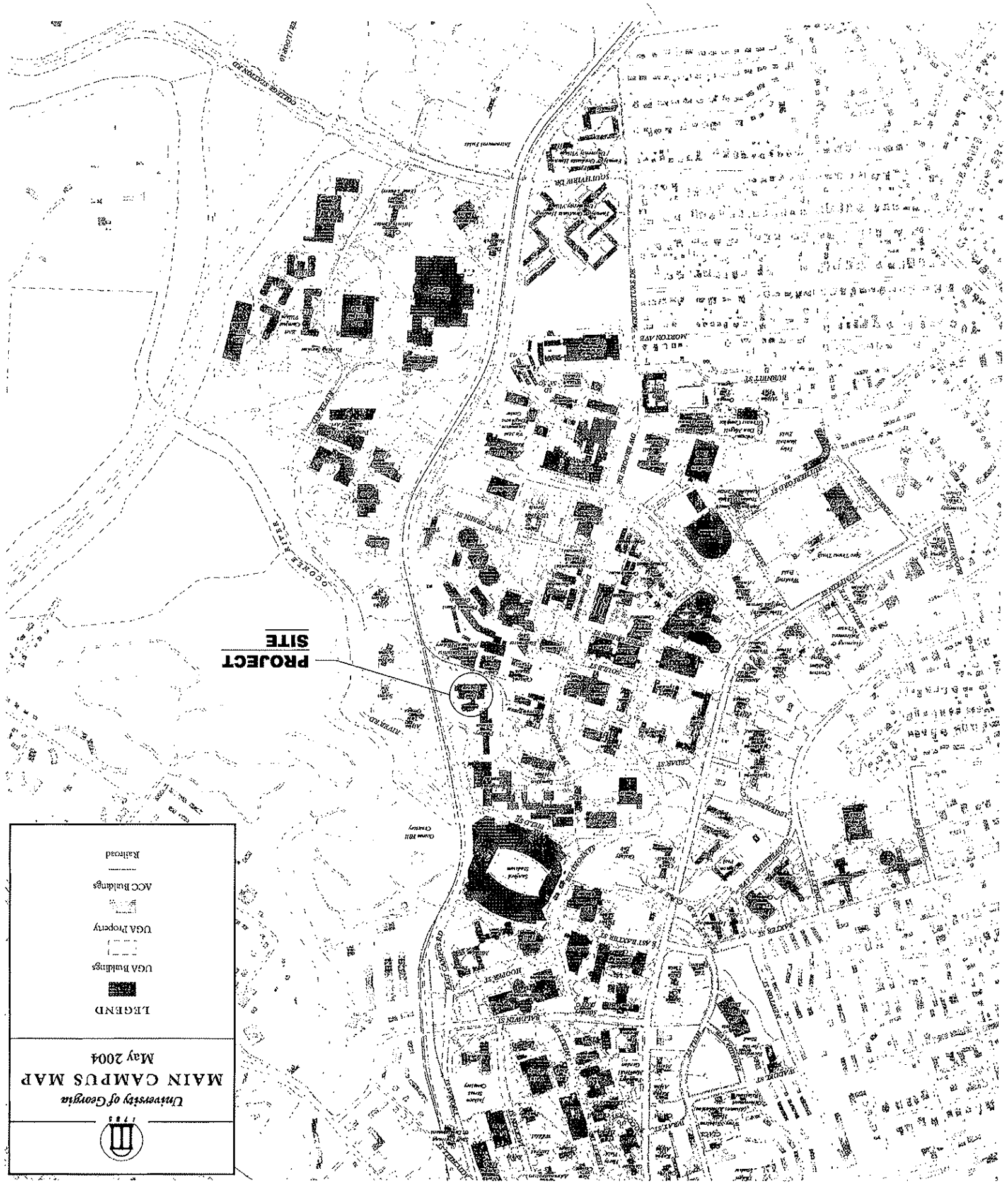

ELEVATOR REPLACEMENT FOR THE
UNIVERSITY OF GEORGIA
FOOD SCIENCES BUILDING
ATHENS, GEORGIA

Millard Inc.
Architects
Planners
Interior Designers
580 Colonial Park Drive
Roswell, Georgia 30075
Phone (770) 993-2034
Fax (770) 640-8334

To Order Plans go to www.ldirepro.com

PROJECT NUMBER	0608
DATE	APRIL 11, 2007
DRAWN BY	SG, JM, MJR
APPROVED BY	MJM

REVISIONS

THIS DRAWING IS THE PROPERTY OF MILLARD, INC ARCHITECTS AND IS NOT TO BE COPIED OR REPRODUCED IN WHOLE OR IN PART. IT IS ONLY TO BE USED FOR THE PROJECT SPECIFICALLY IDENTIFIED HEREIN

SHEET NUMBER
ASO.1
OF

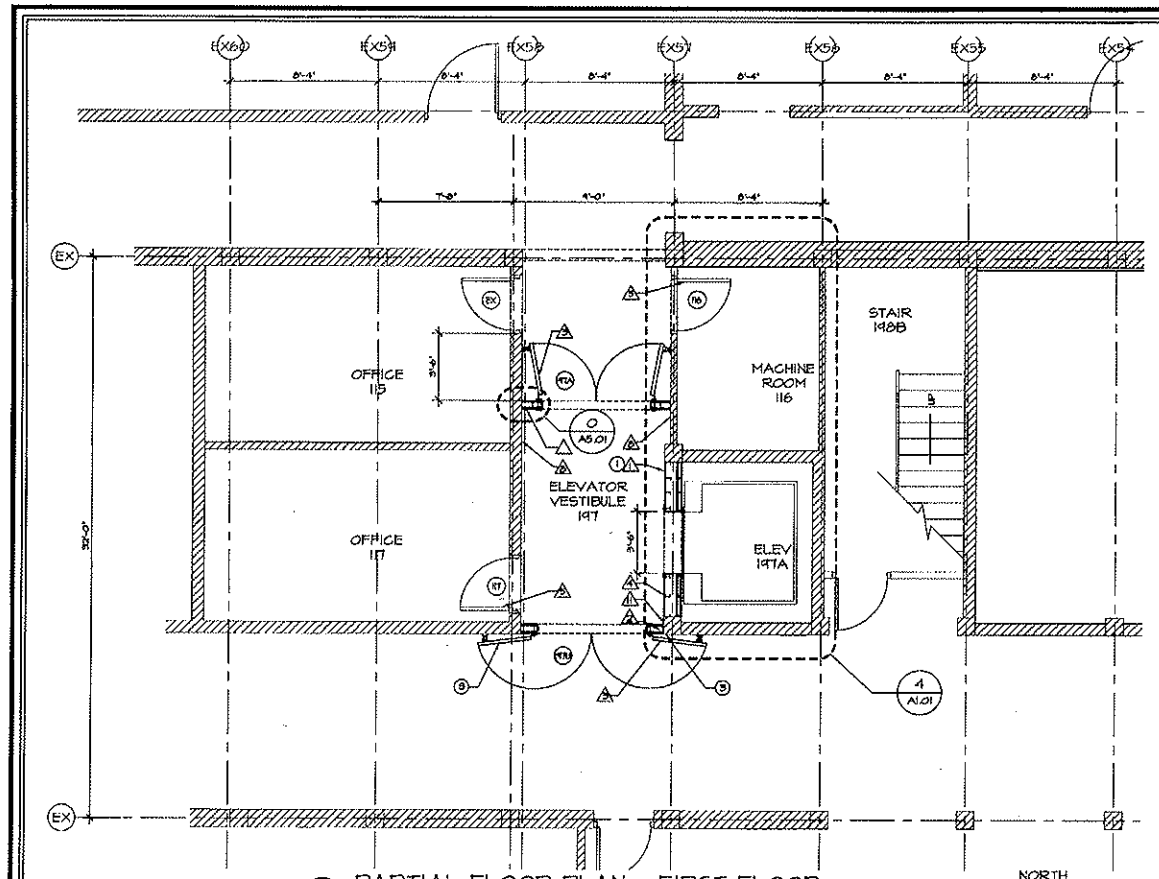

1 A1.01 PARTIAL FLOOR PLAN - FIRST FLOOR
SCALE 1/4" = 1'-0"
*FIELD VERIFY

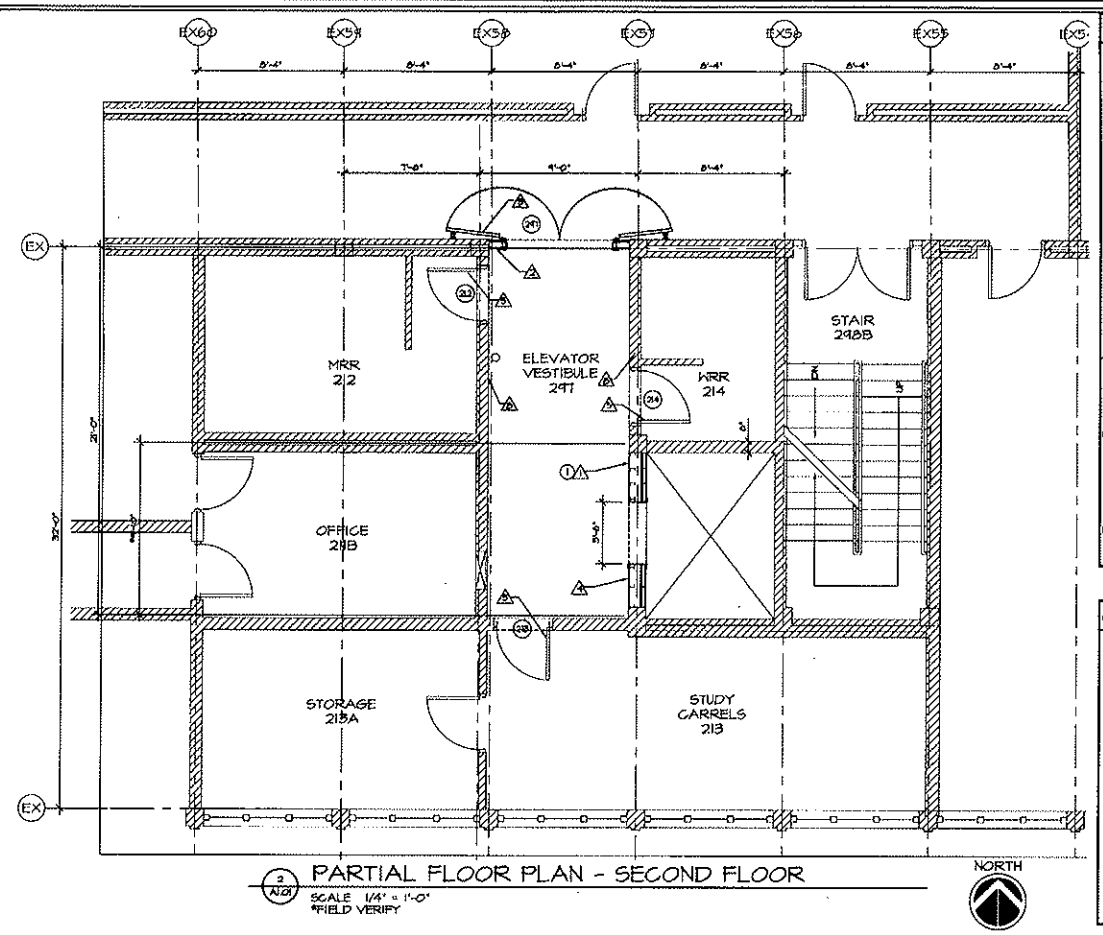

2 A1.01 PARTIAL FLOOR PLAN - SECOND FLOOR
SCALE 1/4" = 1'-0"
*FIELD VERIFY

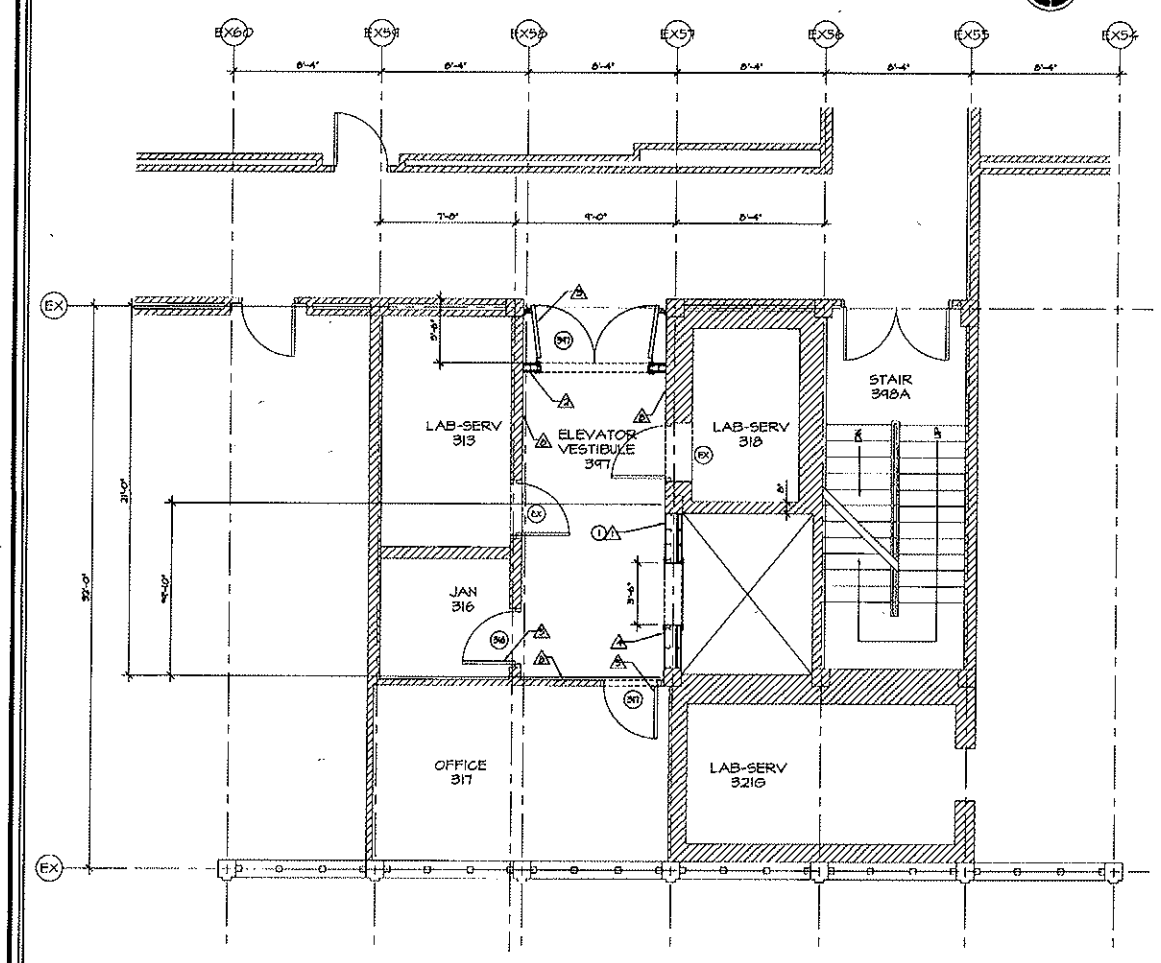

3 A1.01 PARTIAL FLOOR PLAN - THIRD FLOOR
SCALE 1/4" = 1'-0"
*FIELD VERIFY

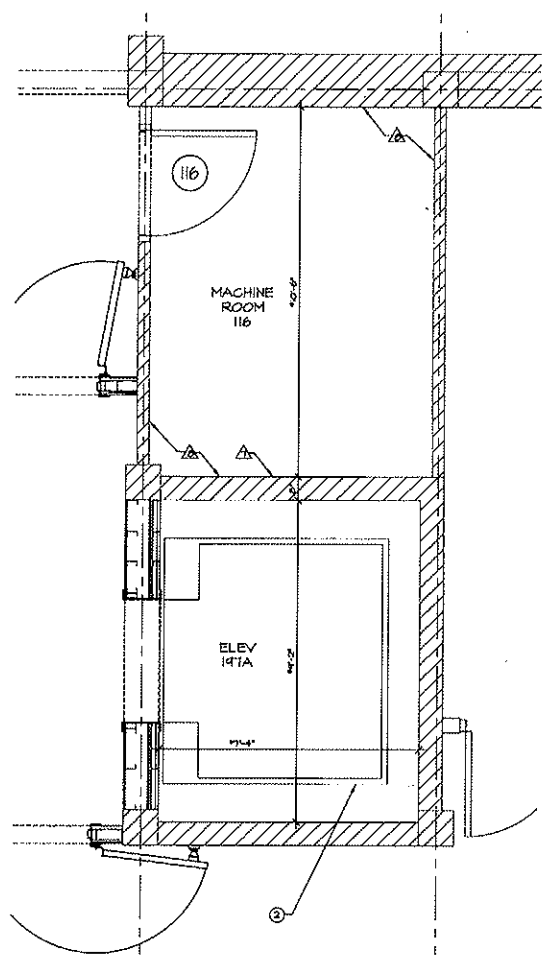

4 A1.01 ENLARGED ELEVATOR & MACHINE ROOM PLAN
SCALE 1/2" = 1'-0"
*FIELD VERIFY

DEMOLITION NOTES:

1. THIS DEMOLITION PLAN IS PROVIDED SOLELY AS A BASIC GUIDE FOR THE CONTRACTOR'S USE IN BIDDING AND BUILDING THE PROJECT. IT IS NOT MEANT TO ENCOMPASS ALL ASPECTS OF SELECTIVE DEMOLITION. IT MUST BE USED WITH THE BALANCE OF THE CONTRACT DOCUMENTS AND PRE-BID JOB VISITS
2. THE CONTRACTOR MUST VISIT THE SITE AND SURVEY ALL CONDITIONS THAT EXIST TO REALIZE THE EXTENT OF THE WORK INVOLVED
3. ALL PRECAUTIONARY MEASURES SHALL BE TAKEN TO PREVENT ANY ACCIDENT FROM OCCURRING DURING DEMOLITION.
4. DEMOLITION SHALL BE ACCOMPLISHED IN STRICT ACCORDANCE WITH ALL CODES AND OSHA REGULATIONS
5. REMOVE DEMOLITION REFUSE AS WORK PROGRESSES TO PREVENT ACCUMULATION OF DEBRIS, BUT NOT LESS THAN DAILY
6. DO NOT OPERATE MECHANICAL VENTILATION EQUIPMENT DURING DEMOLITION WORK IN A MANNER WHICH WOULD INTRODUCE DUST INTO THE SYSTEM. NEVER OPERATE SUCH EQUIPMENT WITH CLOGGED FILTERS OR WITH NO FILTERS
7. PATCH EXISTING CONSTRUCTION TO REMAIN TO WHATEVER EXTENT NECESSARY AND RETURN EXPOSED CONSTRUCTION TO NEW APPEARANCE
8. TURN OVER ALL SALVAGEABLE EQUIPMENT, FIXTURES, ETC., NOT SCHEDULED FOR REUSE, TO THE OWNER'S REPRESENTATIVE, UNLESS SPECIFICALLY INDICATED OTHERWISE
9. DO NOT DISRUPT UTILITIES TO OTHER AREAS EXCEPT WITH THE FULL KNOWLEDGE AND CONSENT OF THE OWNER AND AS DIRECTED BY THE OWNER'S REPRESENTATIVE
10. DO NOT DISRUPT UTILITIES WHICH WOULD AFFECT THE FIRE ALARM SYSTEM, EXCEPT WITH THE KNOWLEDGE OF AND AS DIRECTED BY THE APPROPRIATE LOCAL GOVERNING AUTHORITIES
11. VERIFY THE CONDITION OF ALL EXISTING EQUIPMENT, CONSTRUCTION, DEVICES, ETC., WHICH ARE SCHEDULED TO REMAIN REPORT TO THE OWNER'S REPRESENTATIVE THE EXISTING CONDITIONS
12. IMMEDIATELY NOTIFY THE ARCHITECT AND THE OWNER'S REPRESENTATIVE SHOULD ANY EXISTING CONDITION BE DISCOVERED DURING DEMOLITION WHICH COULD AFFECT THE TIMELY COMPLETION OF THE REMAINING WORK.
13. REQUIRED EXITS MUST REMAIN UNOBSTRUCTED DURING THE CONSTRUCTION OF THE PROJECT. TEMPORARY CONSTRUCTION FENCES SHALL NOT BLOCK EXIT SIGNS, ACCESS TO THE EXIT DOORS OR EMERGENCY LIGHTING FIXTURES. THE CONTRACTOR SHALL RELOCATE DEVICES/ PIPING AS REQUIRED
14. REFER TO "SECTION 01732 - SELECTIVE DEMOLITION" IN THE PROJECT MANUAL FOR ADDITIONAL INFORMATION/ REQUIREMENTS

GENERAL CONSTRUCTION NOTES:

1. ALL WORK SHALL BE DONE SATISFACTORILY IN A PROFESSIONAL MANNER SUBJECT TO INSPECTION DURING CONSTRUCTION AND FINAL APPROVAL OF THE ARCHITECT
2. ANY SUBSTITUTION OF MATERIALS OR EQUIPMENT OR ANY ALTERATIONS FROM THE PLANS AND/OR SPECIFICATIONS SHALL BE APPROVED BY THE ARCHITECT IN ADVANCE
3. ALL COLOR SELECTIONS SHALL BE DONE BY THE ARCHITECT
4. ALL MATERIALS AND INSTALLATIONS SHALL CONFORM TO ALL APPLICABLE CODES
5. THE CONTRACTOR SHALL VERIFY EXISTING CONDITIONS (INCLUDING DIMENSIONS) AND BRING DISCREPANCIES TO THE ATTENTION OF THE ARCHITECT BOTH VERBALLY AND IN WRITING
6. ALL DIMENSIONS ARE TAKEN FROM CENTERLINES OF COLUMNS, FACE OF METAL STUDS, FACE OF AAC PANELS/ BLOCKS, FACE OF CMU OR AS SPECIFICALLY INDICATED OTHERWISE
7. ALL DIMENSIONS NOTED AS "CLEAR" SHALL BE TAKEN FROM FINISHED FACES
8. ALL WALLS SHALL BE BRACED OR ANCHORED TO THE STRUCTURE ABOVE AS NECESSARY

SYMBOLS LEGEND:

- DOOR NUMBER
- WINDOW TYPE
- ROOM NAME / ROOM NUM — ROOM TAG
- COLUMN LINE
- ELEVATION
- WALL SECTION
- BUILDING SECTION
- DETAIL
- ENLARGED PLAN

DEMOLITION KEYNOTES: (INDICATED THUS 1)

1. REMOVE EXISTING SHAFT WALL, ELEVATOR DOORS & FRAME FOR ENTIRE WIDTH OF SHAFT FROM FLOOR TO STRUCTURE ABOVE
2. REMOVE EXISTING HYDRAULIC ELEVATOR, JACK & RELATED APPURTENANCES AS NECESSARY FOR INSTALLATION OF NEW ELEVATOR.
3. REMOVE EXISTING STAINLESS STEEL CORNER GUARDS - TURN OVER TO OWNER.
4. REMOVE EXISTING ELEVATOR EQUIPMENT, CONDUITS, ELECTRICAL SERVICE TO ELEVATOR EQUIPMENT AND ALL RELATED APPURTENANCES IN THE EXISTING ELEVATOR EQUIPMENT SPACE (THE EXISTING ELEVATOR EQUIPMENT SPACE IS NOT SHOWN IN THESE PLANS)
5. REMOVE EXISTING ELEVATOR EQUIPMENT, CONDUITS, ELECTRICAL SERVICE TO ELEVATOR EQUIPMENT AND ALL RELATED APPURTENANCES IN THE EXISTING ELEVATOR EQUIPMENT SPACE (NOT SHOWN IN THESE PLANS) AND THOSE RUN BETWEEN THE EQUIPMENT SPACE AND THE ELEVATOR SHAFT

CONSTRUCTION KEYNOTES: (INDICATED THUS △1)

1. PROVIDE SHAFT WALL (2 HOUR FIRE RATED - UL NO U426) FOR WIDTH OF OPENING FROM FLOOR TO STRUCTURE ABOVE & ADDITIONAL 3 5/8" MET STUDS W/ 3/8" GWB, FLOOR TO STRUCTURE, TO MATCH EXISTING WALL WIDTH - PAINT TO MATCH ADJACENT WALLS
2. PROVIDE 3 5/8" MET STUDS W/ 2 LAYERS TYPE X GWB ON BOTH SIDES (2 HOUR FIRE RATED - UL NO U419) FOR WIDTH OF CORRIDOR FROM FLOOR TO STRUCTURE ABOVE
3. PROVIDE FR 1 1/2 HOUR FIRE RATED (B LABEL) UL #W 3'-0" X 7'-0" X 1 3/4" HM DOOR W/ 1 1/2 PR BALLBEARING HINGE, MAGNETIC HOLD-OPEN DEVICE (BY FIRE ALARM SYSTEM) MRU, ASTRAGAL, COORDINATORS, MORTISE LATCHSET, SILENCERS, DR SHEEP & SMOKE SEALS IN 16 GA HM FRAME- PAINT DR & FRAME TO MATCH EXISTING - REFER TO DETAILS 1 & 2/A9.01
4. PROVIDE HYDRAULIC ELEVATOR SYSTEM W/ CAB, FIXTURES, DOORS & FRAME & RELATED APPURTENANCES - REFER TO DETAILS 4 & 5/A9.01
5. REPLACE EXISTING WD DOOR & TRANSOM W/ SAME SIZE 1 3/4" THK SOLID-CORE WD DOOR & TRANSOM PANEL - PROVIDE 1 1/2 PR BALL-BEARING HINGES, LOCKSET, CLOSER & SILENCERS (ALL HARDWARE TO MEET OWNER'S STANDARDS) - FINISH WD DR & TRANSOM TO MATCH EXISTING - NO GRILLES ARE TO BE REPLACED - REPLACE VISN WINDOWS W/ SAME SIZE WINDOWS & 1/4" TEMPERED HERE GLASS
6. UNUSED
7. SEAL AROUND ALL NEW PIPE, CONDUIT, ETC PENETRATIONS THRU WALL W/ 2 HR FIRE RATED FIRESAFING OR SEALANT
8. PATCH OPENINGS W/ 2 HR FIRE RATED CONSTRUCTION AND/OR SEAL PENETRATIONS W/ 2 HR FIRE RATED FIRESAFING OR FIRE SEALANT THRU EXISTING WALLS FROM CEILING TO UNDERSIDE OF STRUCTURE ABOVE WITHIN ELEVATOR VESTIBULE
9. ENCLOSE EXPOSED DRAIN PIPES AT CEILING W/ MET STUDS & 2 LAYERS 5/8" TYPE X GWB ON ONE SIDE (1 HR FIRE RATED) - PAINT TO MATCH ADJACENT WALLS
10. REPLACE & INSTALL RUBBER BASE ON ALL EXISTING WALLS WHERE REMOVED & NEW WALLS TO MATCH EXISTING
11. REMOVE EXISTING WALL-MTD DEVICE FOR REMOVAL OF EXISTING WALL & INSTALL ON NEW WALL
12. PATCH WALL OPENINGS CREATED BY DEMOLITION OF ELEVATOR EQUIPMENT IN EXISTING ELEVATOR EQUIPMENT ROOM (NOT SHOWN IN PLANS) W/ 1 HOUR RATED CONSTRUCTION

PROJECT NUMBER	0508
DATE	APRIL 11, 2007
DRAWN BY	SG, JM, MJR
APPROVED BY	RJM
REVISIONS	

ELEVATOR REPLACEMENT FOR THE
UNIVERSITY OF GEORGIA
FOOD SCIENCES BUILDING
ATHENS, GEORGIA

Millard Inc. Architects
Planners Interior Designers
380 Colonial Park Drive
Roswell, Georgia 30075
Phone (770) 993-2034
Fax (770) 640-8354

STATE OF GEORGIA
ROBIN JOHN MILLARD
REGISTERED ARCHITECT

THIS DRAWING IS THE PROPERTY OF MILLARD, INC ARCHITECTS AND IS NOT TO BE COPIED OR REPRODUCED IN WHOLE OR IN PART IT IS ONLY TO BE USED FOR THE PROJECT SPECIFICALLY IDENTIFIED HEREIN

SHEET NUMBER
A1.01
OF __

www.ldicpro.com
To Order Plans go to

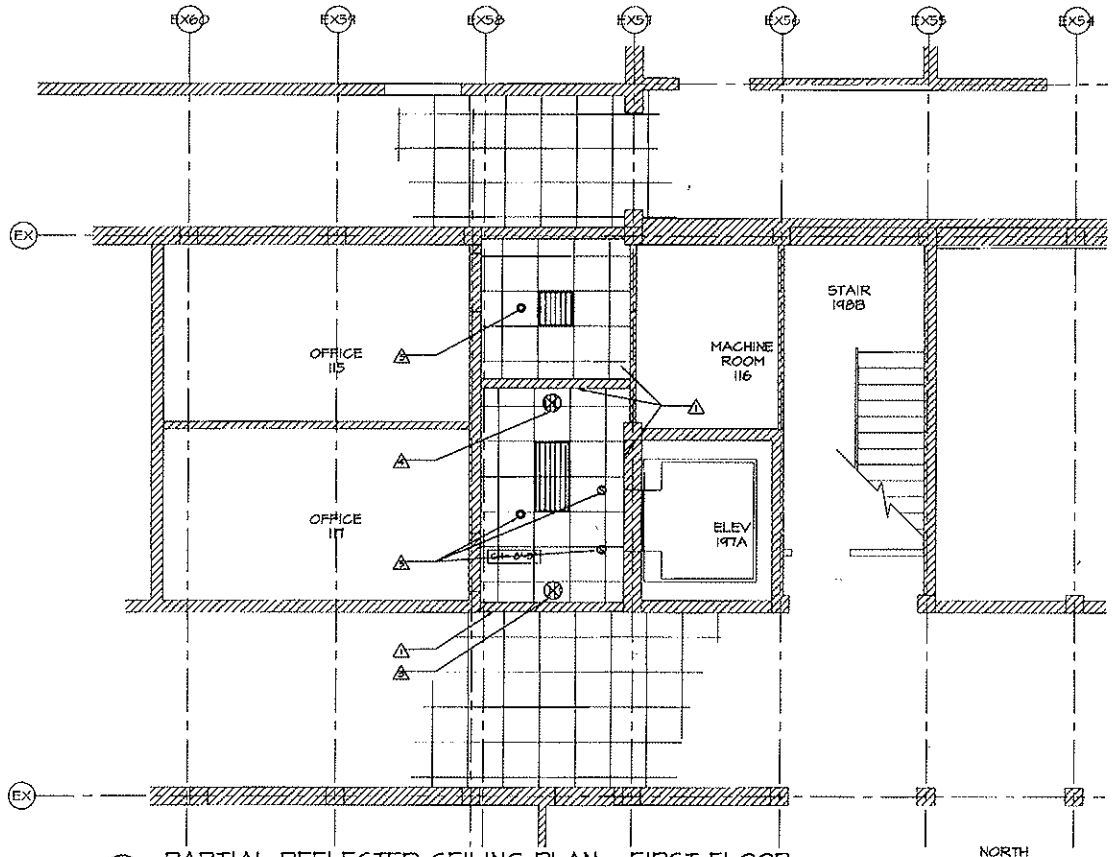

1 A3.01 PARTIAL REFLECTED CEILING PLAN - FIRST FLOOR
SCALE 1/4" = 1'-0"

NORTH

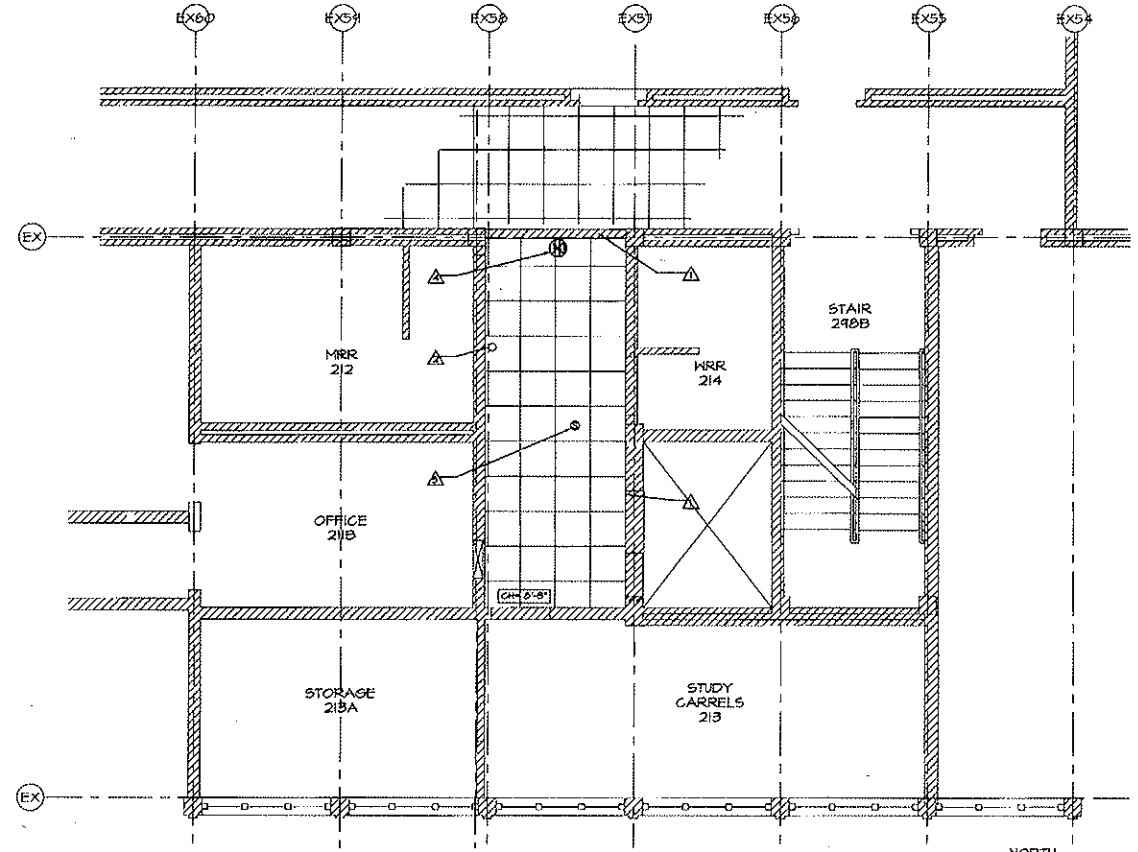

2 A3.01 PARTIAL REFLECTED CEILING PLAN - SECOND FLOOR
SCALE 1/4" = 1'-0"

NORTH

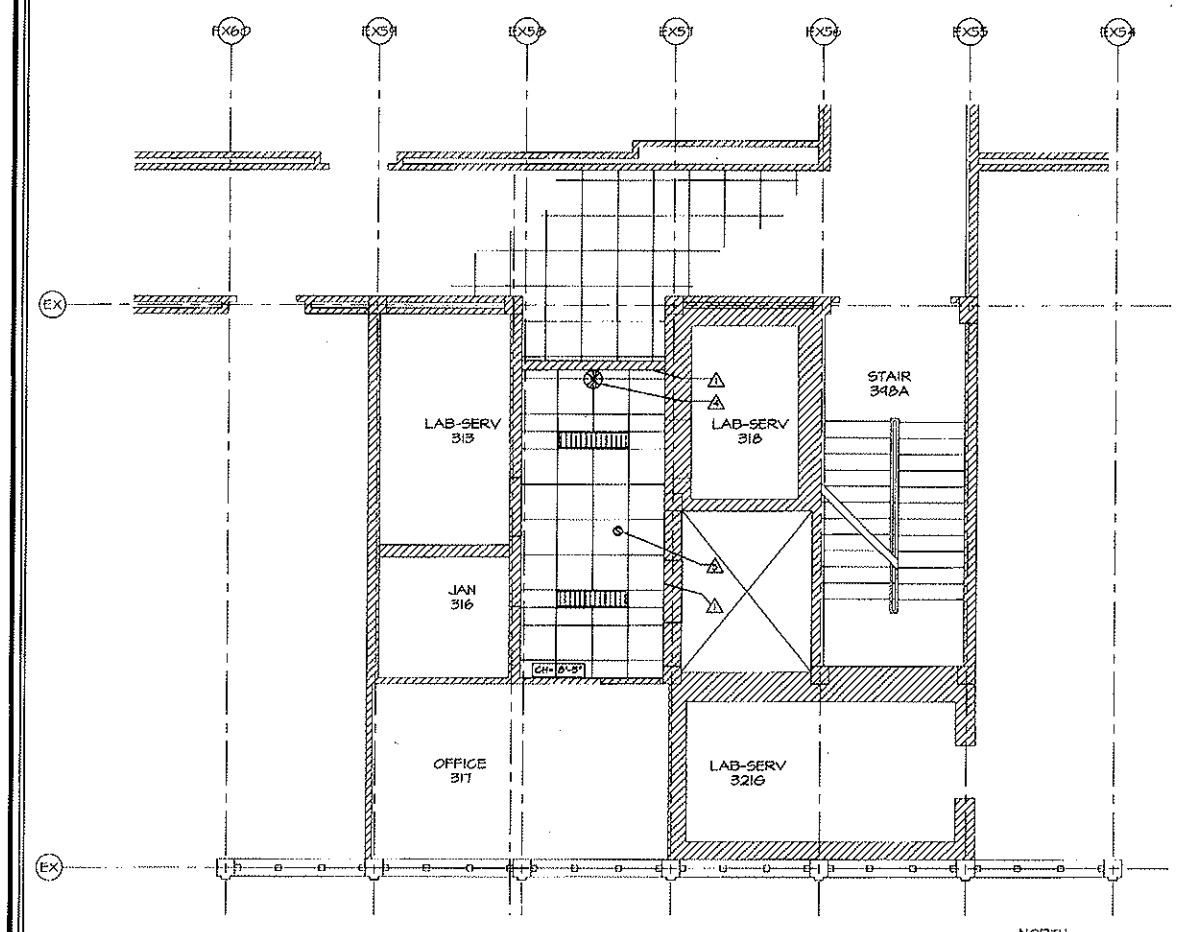

3 A3.01 PARTIAL REFLECTED CEILING PLAN - THIRD FLOOR
SCALE 1/4" = 1'-0"

NORTH

RCP KEYNOTES (INDICATED THIS: △)

- △ MODIFY EXISTING SUSPENDED ACOUSTIC TILE CEILING TIGHT AGAINST NEW WALLS
- △ EXISTING STEEL PIPE THROUGH CEILING
- △ EXISTING EXIT SIGN - RELOCATE FOR CONSTRUCTION PURPOSES ONLY WITH OWNER'S CONSENT
- △ NEW EXIT SIGN
- △ PROTECT SPRINKLER HEADS & SMOKE DETECTORS DURING CONSTRUCTION

REFLECTED CEILING PLAN LEGEND

- SMOKE DETECTOR
- EXISTING LAY-IN FLUORESCENT LIGHT FIXTURE
- EXISTING SUPPLY AIR REGISTER
- EXISTING RETURN AIR GRILLE
- EXISTING EXHAUST AIR GRILLE
- EXIT LIGHT
- EXISTING PENDANT SPRINKLER HEAD

PROJECT NUMBER	0508
DATE	APRIL 11, 2007
DRAWN BY	SG, JM, MJR
APPROVED BY	RJM
REVISIONS	

ELEVATOR REPLACEMENT FOR THE
UNIVERSITY OF GEORGIA
FOOD SCIENCES BUILDING
ATHENS, GEORGIA

Millard Inc.
Architects Planners Interior Designers
580 Cobrand Park Drive
Roswell, Georgia 30075
Phone: (770) 993-2034
Fax: (770) 640-8354

To Order Plans go to www.ldirepro.com

STATE OF GEORGIA
ROBIN KING MILLARD
CERTIFICATE NO. 5811
REGISTERED ARCHITECT

THIS DRAWING IS THE PROPERTY OF MILLARD, INC. ARCHITECTS AND IS NOT TO BE COPIED OR REPRODUCED IN WHOLE OR IN PART IT IS ONLY TO BE USED FOR THE PROJECT SPECIFICALLY IDENTIFIED HEREIN.

SHEET NUMBER
A3.01
OF ____

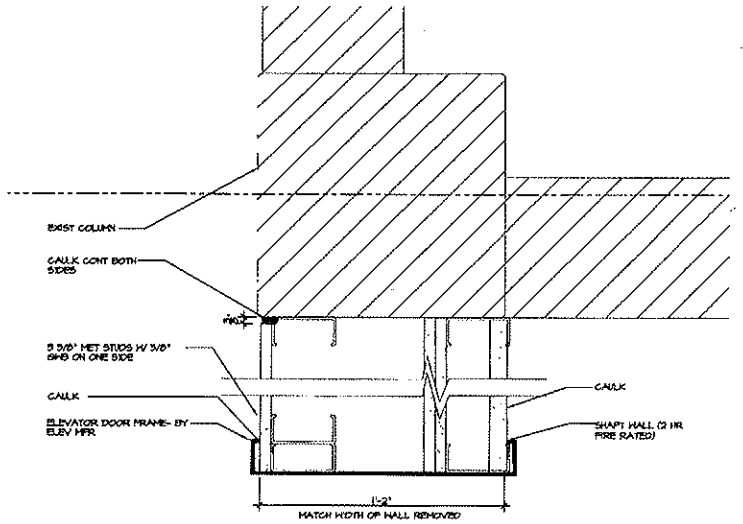

4 A5.01 JAMB
SCALE 3" = 1'-0"

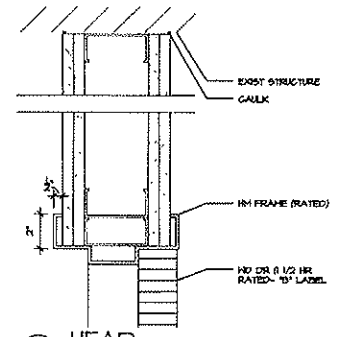

2 A5.01 HEAD
SCALE 3" = 1'-0"

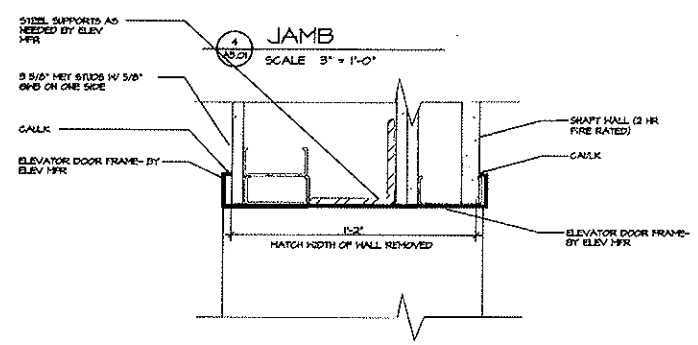

5 A5.01 HEAD
SCALE 3" = 1'-0"

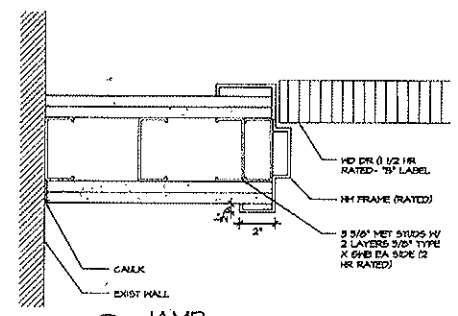

1 A5.01 JAMB
SCALE 3" = 1'-0"

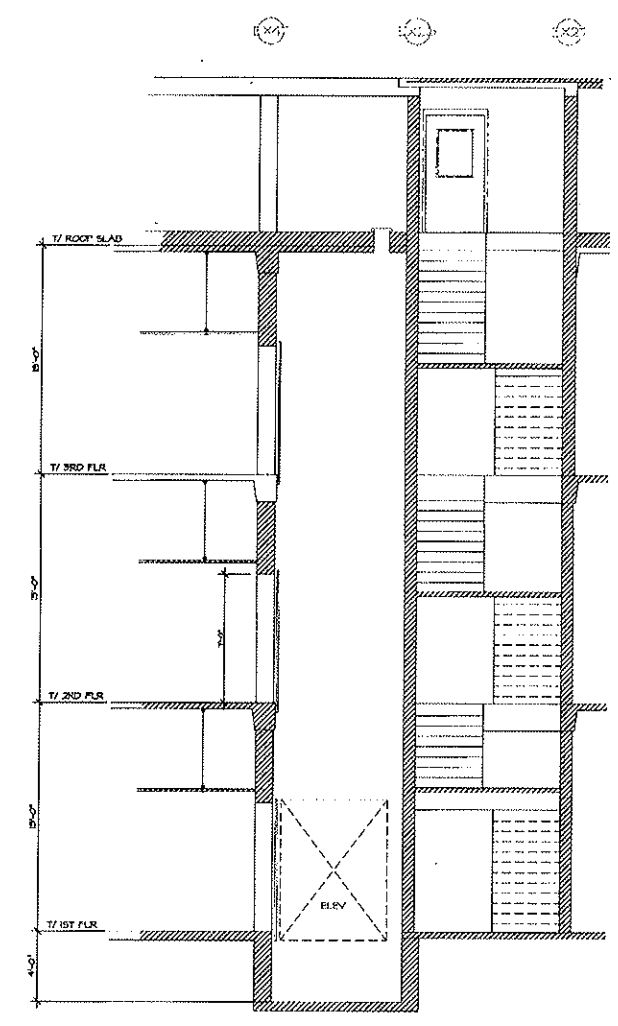

3 A5.01 SECTION
SCALE 1/4" = 1'-0"

PROJECT NUMBER
0508
DATE
APRIL 11, 2007
DRAWN BY
SG, JM, MJB
APPROVED BY
RJM
REVISIONS

ELEVATOR REPLACEMENT FOR THE
UNIVERSITY OF GEORGIA
FOOD SCIENCES BUILDING
ATHENS, GEORGIA

580 Colonial Park Drive
Roswell, Georgia 30075
Phone (770) 993-2034
Fax (770) 640-8354

Millard Inc.
Architects Planners Interior Designers

STATE OF GEORGIA
ROBIN JOHN MILLARD
CERTIFICATE NO. 10574
REGISTERED ARCHITECT

THIS DRAWING IS THE PROPERTY OF MILLARD, INC ARCHITECTS AND IS NOT TO BE COPIED OR REPRODUCED IN WHOLE OR IN PART. IT IS ONLY TO BE USED FOR THE PROJECT SPECIFICALLY IDENTIFIED HEREIN

SHEET NUMBER
A5.01
OF ___

To Order Plans go to www.ldirepro.com