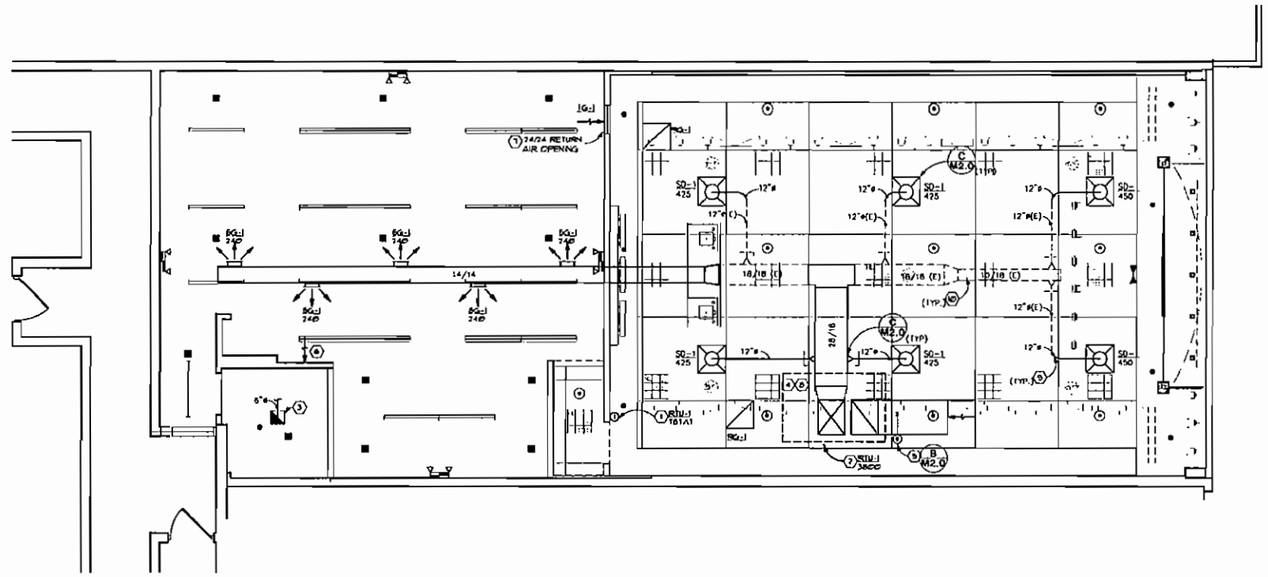

SPRINKLER LEGEND
- FULLY RECESSED SPRINKLER HEAD
- PENDANT SPRINKLER HEAD
- PENDANT SPRINKLER HEAD

2 MECHANICAL GENERAL NOTES

- ☒ HVAC SYSTEM IS TO BE NEW, BY MECHANICAL CONTRACTOR, MECHANICAL CONTRACTOR TO MODIFY EXISTING DUCTWORK
- ☐ HVAC SYSTEM IS TO BE NEW, BY LANDLORD'S MECHANICAL CONTRACTOR, DUCTWORK BY MECHANICAL CONTRACTOR
- ☐ HVAC SYSTEM IS EXISTING TO REMAIN, MECHANICAL CONTRACTOR TO PROVIDE NEW DUCTWORK
- ☐ HVAC SYSTEM IS EXISTING TO REMAIN, MECHANICAL CONTRACTOR TO MAKE MODIFICATIONS TO EXISTING DUCTWORK

FIRE SPRINKLER NOTES

FIRE SPRINKLER SYSTEM:
- EXISTING SPACE FIRE SPRINKLER SYSTEM TO BE MODIFIED PER NEW TENANT SPACE DRAWINGS AS REQUIRED BY NFPA STANDARDS AND LOCAL CODES. ALL AREAS TO BE ORDINARY HAZARD GROUP II OCCUPANCY WITH FIRE SPRINKLER FABRICATION DRAWINGS TO BE SUBMITTED BY TENANT FIRE PROTECTION CONTRACTOR TO BUILDING DEPARTMENT BEFORE WORK COMMENCES. ALL SPRINKLER HEADS WILL BE SEMI-RECESSED CHROME TYPE CENTERED IN 2X2 CEILING GRID. SPRINKLER HEADS - NOTE: SYMETRICAL PATTERN TO ALIGN W/ CEILING ELEMENTS.
- ALL SPRINKLER WORK IS TO BE PERFORMED BY THE MALL REQUIRED CONTRACTOR AT THE TENANTS EXPENSE.

ALL ROOFING WORK SHALL BE PERFORMED BY THE LANDLORD'S CONTRACTOR AT THE TENANT CONTRACTOR'S EXPENSE, IN ORDER TO MAINTAIN THE WARRANTY AND INTEGRITY OF THE ROOF SYSTEM.

THIS CONTRACTOR SHALL ENSURE THAT ALL EQUIPMENT, PIPING AND DUCTWORK, NOT SHOWN TO REMAIN IS FULLY REMOVED AND NOT ABANDONED.

FIELD VERIFY ALL CONDITIONS

DESIGN DRAWINGS ARE SCHEMATIC. THIS CONTRACTOR SHALL VISIT THE SITE PRIOR TO BIDDING OR AWARD OF CONTRACT TO INSPECT EXISTING FIELD CONDITIONS. THIS CONTRACT SHALL INCLUDE ALL LABOR AND MATERIALS NECESSARY FOR FIELD MODIFICATIONS DUE TO EXISTING CONDITIONS.

THE CONTRACTOR SHALL CONTACT THE ARCHITECT, ENGINEER OR OWNER PRIOR TO BIDDING FOR INTERPRETATIONS AND CLARIFICATIONS OF THE DESIGN AND INCLUDE IN HIS BID ALL COSTS TO MEET THE DESIGN INTENT. CLARIFICATIONS MADE BY THE ARCHITECT, ENGINEER OR OWNER AFTER BIDDING WILL BE FINAL, AND SHALL BE IMPLEMENTED AT CONTRACTORS COST.
BIDDING CONTRACTORS SHALL HAVE A WORKING KNOWLEDGE OF LOCAL CODES AND ORDINANCES AND SHALL INCLUDE IN THEIR BIDS THE COSTS FOR ALL WORK INSTALLED IN STRICT ACCORDANCE WITH GOVERNING CODES. THE PLANS AND SPECIFICATIONS NOT WITHSTANDING THE CONTRACTOR SHALL ALERT ARCHITECT, ENGINEER OR OWNER OF ANY APPARENT DISCREPANCIES BETWEEN GOVERNING CODES AND DESIGN INTENT.

YORK NATIONAL ACCOUNTS HVAC EQUIPMENT PACKAGE

FOOT LOCKER HAS A NATIONAL HVAC AGREEMENT WITH YORK. ALL BIDDING CONTRACTORS ARE DIRECTED TO CONTACT YORK NATIONAL ACCOUNTS @ 800.481.3138, FAX 866.406.9619 FOR PRICING.

FOR ALL OTHER INQUIERIES, PLEASE CONTACT DAVID BABEY, NATIONAL ACCOUNT SALES MANAGER, PHONE: 704.318.8512, FAX: 704.318.8573, EMAIL: davidbabey@jci.com.

THE COMPLETE LISTED BILL OF MATERIAL WILL BE PURCHASED AND PROVIDED BY THE GENERAL CONTRACTOR. THE G.C. SHALL BE RESPONSIBLE FOR COORDINATING AND ACCEPTING THE EQUIPMENT, VERIFYING PROPER QUANTITIES AND TYPES OF EQUIPMENT AND PROVIDING TEMPORARY STORAGE OF EQUIPMENT. YORK WILL PROVIDE START-UP AND A ONE YEAR LABOR WARRANTY ON ALL HVAC EQUIPMENT PROVIDED BY THE GENERAL CONTRACTOR.

INSTALLING CONTRACTOR IS RESPONSIBLE FOR PROVIDING AN NABB AIR BALANCE REPORT ON ALL PROVIDED AND FURNISHED EQUIPMENT. AIR BALANCE MUST BE FURNISHED THROUGH AN INDEPENDENT NABB BALANCER MUST NOT BE ON THE STAFF OF THE MECHANICAL CONTRACTOR.

1 MECHANICAL PLAN

SCALE: 1/4" = 1'-0"

1. CONICAL BELLMOUTH FITTINGS WITH MANUAL BALANCING DAMPER TO BE USED FOR ALL ROUND BRANCH TAPS ABOVE ACCESSIBLE LAY-IN CEILINGS. CONICAL BELLMOUTH FITTINGS WITHOUT MANUAL BALANCING DAMPERS TO BE USED FOR ALL ROUND BRANCH TAPS ABOVE INACCESSIBLE DRYWALL CEILINGS WITH BALANCING REQUIRED WITHIN 3 FT. OF DIFFUSER WITH PLASTER FRAME.
2. ROUND RIGID SUPPLY AIR DUCTS SHALL BE EXTERNALLY INSULATED WITH 1" THICK, 1.5 LBS DENSITY FULL FACED FIBEROLASS INSULATION.
3. FLEX CONNECTIONS TO DIFFUSERS ARE INSULATED FLEX WITH A MAXIMUM LENGTH OF 5 FT.
4. MECHANICAL CONTRACTOR SHALL BE RESPONSIBLE FOR COORDINATION OF ALL TRADES, LANDLORD REQUIREMENTS, CEILING HEIGHTS AND EXISTING STRUCTURAL CONDITIONS PRIOR TO FABRICATION OF ANY DUCTWORK OR ORDERING OF ANY EQUIPMENT.
5. MECHANICAL CONTRACTOR TO PROVIDE TENANT WITH AS BUILT DRAWINGS, ALL EQUIPMENT SHOP DRAWINGS, INFORMATION ON THERMOSTATS, CONTROL WIRING DIAGRAMS AND OTHER PERTINENT INFORMATION AT COMPLETION OF PROJECT.
6. MECHANICAL CONTRACTOR IS TO PROVIDE AND INSTALL FIRE DAMPERS IN ANY EXISTING OR NEW DUCTWORK THAT PENETRATES A FIRE RATED PARTITION AS REQUIRED BY CODE.
7. NO FIBERGLASS OR FIBERBOARD DUCTWORK ALLOWED.
8. UPON COMPLETION OF INSTALLATION, SUBMIT A CERTIFICATE TEST AND BALANCE REPORT TO LANDLORD FOR REVIEW AND APPROVAL. THE REPORT SHALL INCLUDE CHILLED WATER TEMPERATURES AND FLOW RATES (AS APPLICABLE) AND ALL AIR FLOW BALANCE DATA.

3 MECHANICAL GENERAL NOTES

⬡ MECHANICAL NOTES

1. THE MECHANICAL CONTRACTOR SHALL FURNISH AND INSTALL A SET BACK THERMOSTAT AT 4 FT. ABOVE FINISHED FLOOR. COORDINATE EXACT LOCATION WITH ELECTRICAL CONTRACTOR. THERMOSTAT SHALL BE A "LIGHSTAT" MODEL THE-AWL AUTOMATIC SETBACK, TWO STAGE HEAT, TWO STAGE COOLING THERMOSTAT. (CONTACT "LIGHSTAT INC." IN BARRINGTON, CT AT 800-793-3444.) THERMOSTAT SHALL BE FULLY COMPATIBLE WITH HVAC UNIT USED FOR PROJECT, COORDINATE TYPE WITH UNIT MANUFACTURER.
2. RTU - 1:
   THE MECHANICAL CONTRACTOR SHALL FURNISH AND INSTALL A ROOF MOUNTED HIGH EFFICIENCY ELECTRIC COOLING ELECTRIC HEATING HVAC UNIT TO REPLACE EXISTING. CONTRACTOR MUST VERIFY MODEL NUMBERS AND ELECTRICAL REQUIREMENTS PRIOR TO INSTALLATION. CONTRACTOR TO FURNISHED AND INSTALLED ACCESSORIES: THREE SETS STANDARD AIR FILTERS. CONTRACTOR TO REPLACE FILTERS JUST PRIOR TO AIR BALANCE AND ONCE AGAIN AFTER FINAL STORE CLEANING IS COMPLETE.
3. TOILET EXHAUST FAN (120V, 1 PH, 60 HZ) COMPLETE WITH INTEGRAL BACKDRAFT DAMPER AND ON-OFF SWITCH. UNIT SHALL BE FURNISHED BY TENANT (WITH LIGHTING PACKAGE). EXHAUST CAPACITY SHALL BE 100 CFM. EXTEND TO EXISTING EXHAUST DUCT.
4. CONTRACTOR SHALL INSTALL CONDENSATE DRAINS AS REQUIRED BY LANDLORD. MINIMUM DRAIN SIZE TO BE 1" OR AS SPECIFIED BY THE MANUFACTURER. DRAIN SHALL BE TRAPPED WITH A TRAP DEPTH OF 1.5 THE UNITS TOTAL STATIC PRESSURE. COORDINATE WITH LANDLORDS ONSITE REPRESANITIVE.
5. SMOKE DETECTOR IN RETURN AIR DUCT TO DE-ENERGIZE RTU SUPPLY FAN IF ACTIVATED. SMOKE DETECTOR TO BE FACTORY INSTALLED.
6. GENERAL CONTRACTOR TO UNDER CUT DOOR, 1" FOR AIR PASSAGE WAY.
7. PROVIDE RETURN AIR OPENING THROUGH THE WALL SEPARATING THE SALES AREA FROM THE NON-SALES AREA. SIZE OPENING AS NOTED. PROVIDE FIRE DAMPER WHERE REQUIRED.
8. EXTEND DUCTS UP TO RTU FULL SIZE.
9. CONNECT NEW BRANCH DUCTWORK TO EXISTING BRANCH DUCTWORK.
10. SIZES SHOWN ARE MINIMUM INSIDE FREE AREA. MECHANICAL CONTRACTOR TO REUSE DUCTWORK WHERE POSSIBLE. ANY DUCTWORK REUSED MUST BE IN GOOD WORKING CONDITION, MEET ALL APPLICABLE SPECIFICATIONS, AND CONFORM WITH MINIMUM SIZE ON PLANS.

4 MECHANICAL CODED NOTES

SYMBOL	DESCRIPTION	SYMBOL	DESCRIPTION
	SUPPLY AIR DIFFUSER SHADING DENOTES BLANK-OFF		ROOF MOUNTED EQUIPMENT AS NOTED
	DUCT MOUNTED DIFFUSER WITH BALANCE DAMPER		BROAN MODEL#636 COMBINATION LIGHT/TOILET EXHAUST FAN
	RETURN AIR GRILLE OR DUCT	T	THERMOSTAT (S-DENOTES SENSOR)
	EXISTING AIR DEVICE TO REMAIN	TV	TURNING VANES
	STORT PIPES		BRANCH DUCT WITH LAY-IN FITTING AND VOLUME DAMPER
	APPROVED FIRE/SMOKE DAMPER	TOILET ROOM	ROOM NAMES
HSW	HIGH SIDE WALL		DUCT SMOKE DETECTOR
LSW	LOW SIDE WALL	20/20 (E)	EXISTING DUCTWORK
MC	MECHANICAL CONTRACTOR		

1 SYMBOL SCHEDULE

TO ORDER PLANS GO TO WWW.LDIREPRO.COM

FOOT LOCKER, INC.

STORE PLANNING DEPT.
112 WEST 34TH STREET
NEW YORK, NY 10120

ARCHITECTURAL CONSTRUCTION SERVICES
DAVID L. SOBOSY - MANAGING DIRECTOR
www.4acs.com
P 714.436.9000
F 714.436.9053
Corporate Office
1725 Bristol Street
Costa Mesa, CA 92626

SEAL

ENGINEER

M Retail Engineering, Inc.
C.O.A. #9100
730 Brookridge Blvd.
Westerville, Ohio 43081
TEL: 614 919 2323
FAX: 614 919 2307
David F. Gonzalez - Reg. #54327

REVISIONS

NO.	DESCRIPTION	DATE

DATE:	03/12/07
SCALE:	AS SHOWN
GROSS AREA:	2,270 SQ. FT.
SALES AREA:	1,287 SQ. FT.
PROJECT # :	0712040
DRAWN BY:	JAH/

FOOTACTION USA

PROJECT TITLE
TYRONE SQUARE
SPACE 110
6901 Tyrone Square
St. Petersburg, FL 33710
STORE NO. 57284

SHEET TITLE
MECHANICAL PLAN

SHEET NO. M1.0

Air System Information

Air System Name	FOOTACTION	Number of zones	1
Equipment Class	PKG ROOF	Floor Area	2270.0 ft²
Air System Type	62CAV	Location	Tampa, Florida

Sizing Calculation Information

Zone and Space Sizing Method:

Zone CFM	Sum of space airflow rates	Calculation Months	Jan to Dec
Space CFM	Individual peak space loads	Sizing Data	Calculated

Central Cooling Coil Sizing Data

Total coil load	8.4 Tons	Load occurs at	Aug 1400
Total coil load	101.3 MBH	OA DB / WB	91.5 / 75.0 °F
Sensible coil load	77.2 MBH	Entering DB / WB	75.7 / 63.1 °F
Gross CFM at ARI rating	3780 CFM	Leaving DB / WB	57.2 / 56.0 °F
Max block CFM	3780 CFM	Coil ADP	54.9 °F
Sum of peak zone CFM	3780 CFM	Bypass Factor	0.100
Sensible heat ratio	0.764	Resulting RH	53 %
SHTM	268.1	Design supply temp	58.0 °F
BTU/hr-ft²	44.6	Zone T-stat Check	1 of 1 OK
Water flow @ 10.0 °F rise	N/A	Max zone temperature deviation	0.0 °F

Central Heating Coil Sizing Data

Max coil load	76.7 MBH	Load occurs at	Dec Hrg
Coil CFM at Clng Htg	3780 CFM	BTU/hr-ft²	12.9
Max coil CFM	3780 CFM	Ent. DB / Lvg DB	65.8 / 75.3 °F
Water flow @ 20.0 °F drop	N/A		

Supply Fan Sizing Data

Actual max CFM	3780 CFM	Fan motor BHP	0.98 BHP
Standard CFM	3780 CFM	Fan motor WHP	0.92 WHP
Actual max OA MIN	1.52 CFM/ft²	Fan static	1.00 in wg

Outdoor Ventilation Air Data

Design airflow CFM	534 CFM	CFM/person	34.17 CFM/person
CFM/ft²	0.24 CFM/ft²		

ZONE LOADS	DESIGN COOLING COOLING DATA AT Aug 1400 COOLING OA DB / WB 91.5 °F / 75.0 °F			DESIGN HEATING HEATING DATA AT DEC 0110 HEATING OA DB / WB 34.0 °F / 30.3 °F		
	Totalle	Sensible (BTU/hr)	Latent (BTU/hr)	Totalle	Sensible (BTU/hr)	Latent (BTU/hr)
Window & Skylight Solar Loads	0 ft²	0	-	0 ft²	-	-
Wall Transmission	0 ft²	0	-	0 ft²	0	-
Roof Transmission	2268 ft²	18074	-	2268 ft²	6027	-
Window Transmission	0 ft²	0	-	0 ft²	0	-
Skylight Transmission	0 ft²	0	-	0 ft²	0	-
Door Loads	0 ft²	0	-	0 ft²	0	-
Floor Transmission	2270 ft²	0	-	2270 ft²	0	-
Partitions	0 ft²	0	-	0 ft²	0	-
Ceiling	0 ft²	0	-	0 ft²	0	-
Overhead Lighting	2268 W	6857	-	0	0	-
Task Lighting	4540 W	13724	-	0	0	-
Electric Equipment	3172 W	10646	-	0	0	-
People	22	3140	3960	0	0	0
Infiltration	-	0	0	-	0	0
Miscellaneous	-	0	0	-	0	0
Safety Factor	10% / 10%	3605	662	10%	602	0
>> Total Zone Loads	-	55177	4622	-	6614	0
Zone Conditioning	-	53589	4256	-	10630	0
Plenum Wall Load	0%	0	-	0	0	-
Plenum Roof Load	0%	0	-	0	0	-
Plenum Lighting Load	0%	0	-	0	0	-
Return Fan Load	3780 CFM	0		3780 CFM	0	-
Ventilation Load	534 CFM	10213	17438	534 CFM	19530	0
Supply Fan Load	3780 CFM	1767	-	3780 CFM	-1767	-
Space Fan Coil Fans	-	0		-	0	
Duct Heat Gain / Loss	3%	1930	-	3%	794	-
>> Total System Loads	-	77334	23693	-	26896	0
Central Cooling Coil	-	77334	23693	-	0	0
Central Heating Coil	-	0		-	26896	
>> Total Conditioning	-	77334	23693	-	26896	0

Key: Positive values are clg loads; Negative values are htg loads — Positive values are htg loads; Negative values are clg loads

K HVAC LOADS

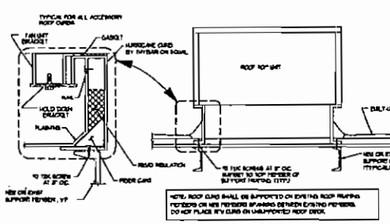

J ROOF TOP DETAIL (NTS)

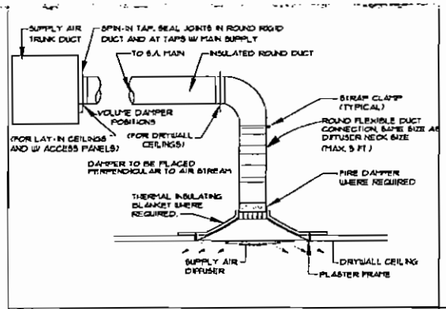

C DIFFUSER MOUNTING DETAIL (NTS)

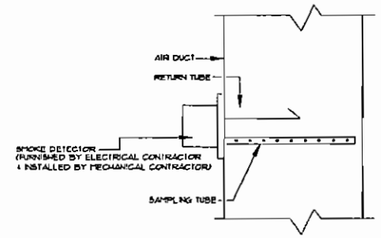

B SMOKE DETECTOR DETAIL (NTS)

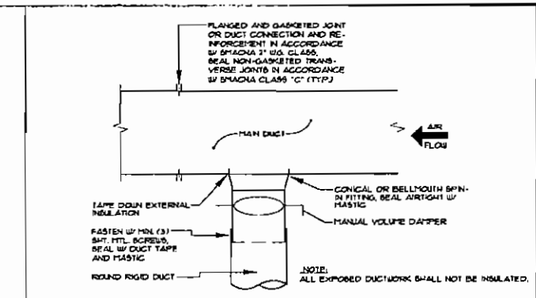

A TYPICAL ROUND DUCT TAKE-OFF DETAIL (NTS)

1. ALL WATER LINES, VENT LINES, DRAIN LINES, SPRINKLER LINES, ETC. SHALL BE OFFSET BELOW PLATFORM AND CONCEALED IN WALL ABOVE PLATFORM. DO NOT ROUTE PIPING, ETC. THROUGH STORAGE SPACE ABOVE PLATFORM OR ABOVE ELECTRICAL EQUIPMENT.
2. CONNECT NEW 4" SANITARY LINE INTO THE MALL'S EXISTING SANITARY MAIN. FIELD VERIFY EXACT LOCATION OF MALL'S SANITARY MAIN BEFORE STARTING WORK. COORDINATE WITH LANDLORD'S REPRESENTATIVE.
3. ROUTE NEW 3" VENT LINE FROM TENANT'S PLUMBING FIXTURES THRU ROOF. ALL ROOFING WORK TO BE BY LANDLORD'S APPROVED CONTRACTOR AT TENANT'S CONTRACTOR'S EXPENSE.
4. CONNECT NEW 3/4" COLD WATER LINE TO EXISTING COLD WATER LINE PROVIDED BY LANDLORD. PROVIDE WITH BACKFLOW PREVENTOR WHERE REQUIRED BY CODE.
5. FURNISH AND INSTALL WATER HAMMER ARRESTORS IN THE DOMESTIC COLD WATER PIPING AS SHOWN ON THE WATER RISER DIAGRAM. WATER HAMMER ARRESTORS TO BE LOCATED IN AN ACCESSIBLE LOCATION. UNITS AS MANUFACTURED BY SIOUX OR PRECISION PLUMBING PRODUCTS ARE ACCEPTABLE.
6. ALL PLUMBING FIXTURES SHALL BE INSTALLED WITH STOP VALVES TO ISOLATE EACH FIXTURE. REFER TO RISER DIAGRAM AND PLUMBING SPECIFICATIONS FOR FURTHER INFORMATION.

VERIFY ALL CONDITIONS IN THE FIELD BEFORE BIDDING.

F PLUMBING CODED NOTES

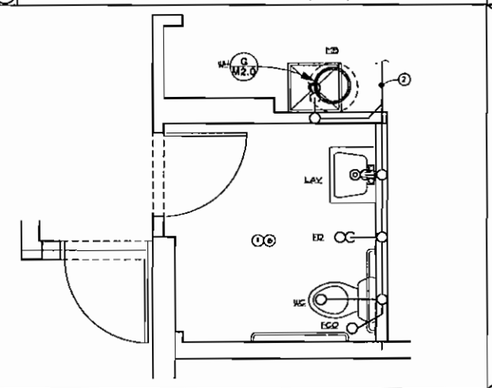

E PLUMBING PLAN SCALE: 1/2"=1'-0"

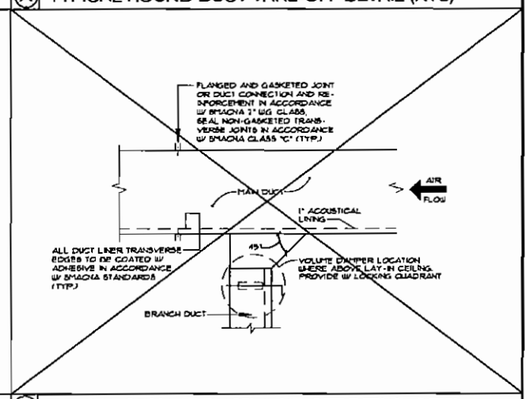

D TYPICAL SQUARE DUCT TAKE-OFF DETAIL (NTS)

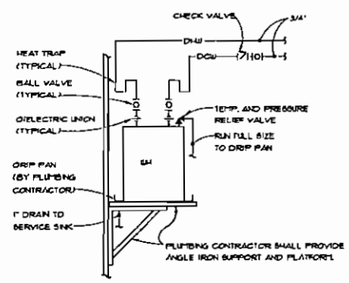

G WATER HEATER DETAIL (NTS)

WC (H.C.) WATER CLOSET - AMERICAN STANDARD "CADET" MODEL # 2462.100 (1.6 GALLON) FLOOR MOUNTED, ELONGATED BOWL, TANK TYPE. CHROME TRIP LEVER, WATER SAVER, VITREOUS CHINA, 17" RIM HEIGHT. MEETS ADA GUIDELINES AND ANSI REQUIREMENTS FOR PEOPLE WITH DISABILITIES. FURNISH WITH WHITE COLOR OLSONITE MODEL 195 OPEN FRONT SEAT WITH COVER AND CHROME SUPPLY WITH STOP. OPEN EQUAL BY KOHLER.

LAV (H.C.) LAVATORY - AMERICAN STANDARD MODEL 0474.074 WITH FAUCET (MODEL #7385.040) EQUAL BY KOHLER MODEL #2175 WITH FAUCET (MODEL #15759) EQUAL BY CRANE MODEL 79-371 OR ELGER MODEL # 0761-13AA.

WH WATER HEATER - A.O. SMITH "DEL-6, 6 GALLON, 500 WATT DCV, 1 PHASE, EQUALS BY RHEEM OR RUUD.

FCO FLOOR CLEAN OUT - ZURN "ZN400-HD-2 (CONC. FLOORS) OR ZN 1400-2 (TILE FLOOR). EQUALS BY J.R. SMITH OR WADE.

WHA WATER HAMMER ARRESTER - SIOUX CHIEF 1540 SERIES OR EQUAL BY PRECISION PLUMBING PRODUCTS, INC. EQUAL BY ZURN.

FD FLOOR DRAIN - ZURN "Z415, 3" WITH NICKEL BRONZE STRAINER (PROVIDE WITH TRAP PRIMER IF REQUIRED BY CODE OR SHOWN ON DRAWINGS) EQUAL BY J.R. SMITH.

TP TRAP PRIMER- PRECISION PLUMBING PRODUCTS #72-500, MOUNT ABOVE CEILING IN ACCESSIBLE LOCATION. PROVIDE WITH 59-5 SUPPLY TUBE.

DF DRINKING FOUNTAIN - HALSIB BARRIER FREE MODEL #BF8AC, WALL MOUNTED, FURNISH WALL HANGER PLATE, CHROME P-TRAP AND SUPPLY STOP. MOUNT TO "ANSI" STANDARD FOR HANDICAPPED AT 34 1/2" MAX. FROM FLOOR TO SPOUT OUTLET. FURNISHED AND INSTALLED BY PLUMBING CONTRACTOR.

I PLUMBING FIXTURE SCHEDULE

NOTES:
1. SYMBOL KEY - FIRST LETTER: S-SUPPLY R-RETURN E-EXH T-TRANSFER. SECOND LETTER: D-DIFFUSER R-REGISTER G-GRILLE
2. PROVIDE OPTIONAL DIRECTIONAL FLOW FEATURE FOR OTHER THAN 4-WAY.
3. FINISH: "A" WHITE - 0.5 TO FIELD PAINT TO MATCH CEILING OR WALL WITH ENAMEL PAINT.
4. VOLUME DAMPER: FACTORY FURNISHED, OPPOSED BLADE OR BUTTERFLY WHERE AVAILABLE. ADJUSTABLE FROM FACE.
5. BORDER STYLE: "A" SURFACE MOUNTED "B" LAY-IN. PROVIDE WITH PLASTER FRAME FOR DRYWALL CEILING MOUNTING. "C" LAY-IN FRAME FOR T-BAR CEILING.
6. PROVIDE ROOF FOR DUCT MOUNTING.

SYMBOL (1)(2)	MANUFACTURER'S CATALOG NUMBER	NOMINAL SIZE MOD.	NOMINAL SIZE NECK	MOUNTING CEIL.	MOUNTING OTHER	MATERIAL STEEL	MATERIAL ALUM.	FINISH (3)	DPR (4)	BORDER (5)	REMARKS
SD-1	TITUS TR8	24"x24"	12"ø	●		●		B	●	C	
SG-1	TITUS 300RL	12"x8"	10"x6"		DUCT	●		A	●	A	DUCT MOUNTED
RG-1	TITUS TR8	24"x24"	-	●			●	B		C	
TG-1	TITUS TR8	24"x24"	-		●	●		B		C	HIGH SIDE WALL

H AIR DEVICES AND HVAC SCHEDULES (NTS)

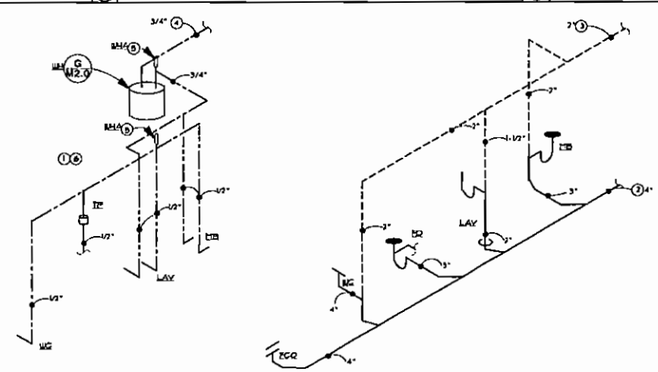

M STACK AND RISER DIAGRAM (NTS)

ROOFTOP A/C UNITS SCHEDULE

MARK	SUPPLY CFM	MIN. O.A. CFM	E.S.P.	COOLING CAPACITY TOTAL BTUH	COOLING CAPACITY SENSIBLE BTUH	EFFICIENCY EER	EFFICIENCY IPLV	ELECTRIC HEATING INPUT KW	ELECTRIC HEATING NO. STAGES	ELECTRIC HEATING OUTPUT CAPACITY MBH	ELECTRICAL DATA MOTOR HP.	ELECTRICAL DATA VOLT	ELECTRICAL DATA PHASE	OPER. WGHT. LBS.	MANUFACTURER/ MODEL NUMBER
RTU-1	3000	535	.5	108400	78300	11.0	13.1	13.5	2	46.075	2.0	208	3	1340	YORK MODEL# DH036

NOTE:
CONTRACTOR SHALL VERIFY ALL EXISTING CONDITIONS AT JOB SITE. SCHEDULED CAPACITIES BASED ON MANUFACTURER'S PERFORMANCE DATA @ 95 DEG. AMBIENT - 80 DEG. DB/67.0 DEG. WB

UNIT INSTALLATION SHALL BE IN STRICT ACCORDANCE WITH THE LANDLORD'S DESIGN CRITERIA.

UNIT TO BE FURNISHED WITH FULL PERIMETER ROOF CURB, 2" THICK FILTER MEDIA, FACTORY INSTALLED ELECTRIC HEATING COIL, AND ECONOMIZER W/ GRAVITY RELIEF AND PROGRAMMABLE THERMOSTAT & SUBBASE.

MINIMUM FRESH AIR QUANTITIES BASED ON ASHRAE STANDARD 62-1999 (0.30 CFM/SQFT.-SALES, 0.15 CFM/SQFT.-STOCK) SET MINIMUM OUTSIDE AIR AS SCHEDULED ABOVE.

OUTSIDE AIR DAMPER SHALL FULLY CLOSE UPON SHUTDOWN.

PROVIDE "RETURN" AIR SMOKE DETECTORS ON ALL UNITS PREWIRED & INTERLOCKED. PROVIDE ALL RELAYS, WIRING & DEVICES TO SHUT DOWN UNIT UPON DETECTION OF SMOKE BY ANY UNIT SMOKE DETECTOR.

L ROOF TOP UNIT SCHEDULE

TO ORDER PLANS GO TO WWW.LDIREPRO.COM

FOOTLOCKER, INC.

STORE PLANNING DEPT.
112 WEST 34TH STREET
NEW YORK, NY 10120

ARCHITECTURAL CONSTRUCTION SERVICES
DAVID L. SNOWDEN - MANAGING ARCHITECT
www.dcsai.com
P 714.436.9000
F 714.436.9088
Corporate Office
1122 Bristol Street
Costa Mesa, CA 92626

SEAL

ENGINEER

M Retail Engineering, Inc.
C.O.A. #9190
750 Brookridge Blvd.
Westerville, Ohio 43081
TEL: 614 818 2325
FAX: 614 818 2327
David F. Gonzalez - Reg. #54327

REVISIONS

NO.	DESCRIPTION	DATE

DATE:	03/12/07
SCALE:	AS SHOWN
GROSS AREA:	2,270 SQ. FT.
SALES AREA:	1,287 SQ. FT.
PROJECT # :	0712040
DRAWN BY:	JAHAUK

FOOTACTION USA

PROJECT TITLE
TYRONE SQUARE
SPACE 110
6901 Tyrone Square
St. Petersburg, FL 33710

STORE NO. 57284

SHEET TITLE
MECHANICAL DETAILS

SHEET NO. M2.0