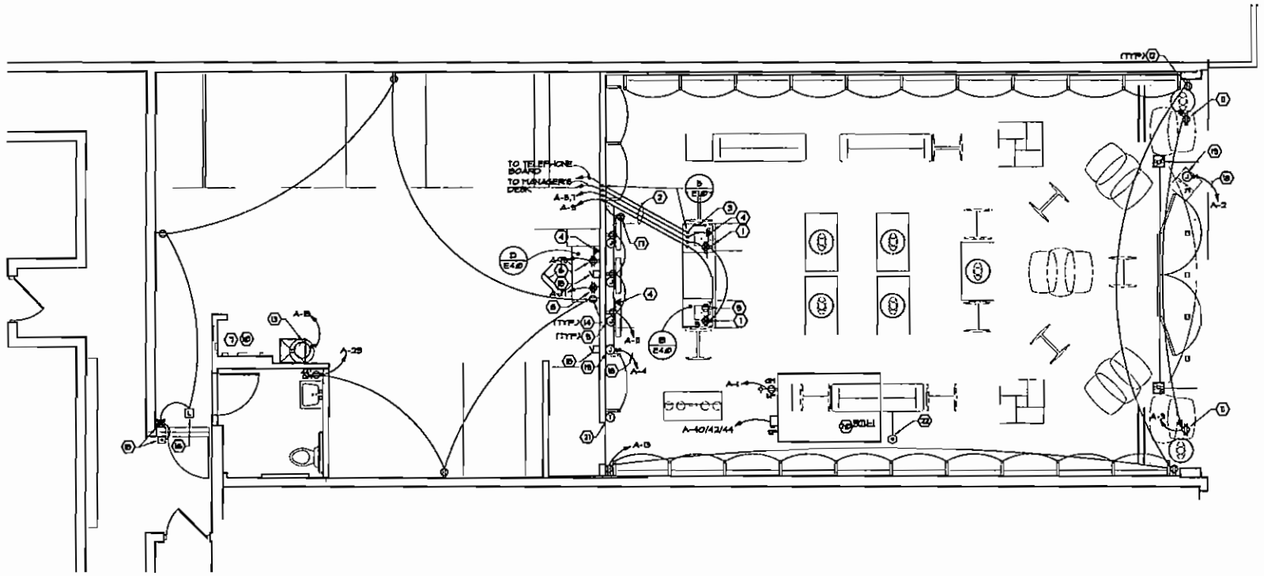

1 POWER PLAN

ALL SYMBOLS DO NOT NECESSARILY APPLY

SCALE: 1/4" = 1'-0"

SYMBOL	DESCRIPTION	MOUNTING HGT. TO CENTERLINE UNLESS OTHERWISE NOTED	SYMBOL	DESCRIPTION	MOUNTING HGT. TO CENTERLINE UNLESS OTHERWISE NOTED	SYMBOL	DESCRIPTION	MOUNTING HGT. TO CENTERLINE UNLESS OTHERWISE NOTED
J	WIRED JUNCTION BOX	SEE DRAWINGS		MANUAL MOTOR STARTING SWITCH W/ PILOT LIGHT	48" AFF. (TYP)	F	FIRE ALARM BREAK STATION	48" AFF. (TYP)
	DUPLEX RECEPTACLE, 3 WIRE GRD. TYPE, 20A	18" AFF (TYP)	T	TELEPHONE OUTLET	18" AFF. (TYP)	F	FIRE ALARM AUDIO/VISUAL SIGNAL DEVICE	80" AFF. (TYP)
WP	DUPLEX RECEPTACLE, WEATHERPROOF 20A	18" AFF (TYP)	T2	TELEPHONE OUTLET - DUPLEX	18" AFF. (TYP)	S	SMOKE DETECTOR	AT FINISH CEILING
GFI	GROUND FAULT PROTECTED DUPLEX RECEPTACLE, 20A	18" AFF. (TYP)	D	DATA OUTLET - CATEGORY 5	18" AFF. (TYP)	F	FIRE ALARM VISUAL SIGNAL DEVICE	80" AFF. (TYP)
	QUADRAPLEX WALL RECEPTACLE, 20A	18" AFF. (TYP)	D2	DATA OUTLET - DUPLEX CATEGORY 5	18" AFF. (TYP)	L	PANIC EXIT DOOR LOCK	
	GFI WALLIGHT + SWITCH	AS REQUIRED		SAFETY SWITCH	AS REQUIRED			
	PUSHBUTTON STATION	48" AFF. (TYP)		MAGNETIC MOTOR STARTER	AS REQUIRED			
	LOW VOLTAGE BUZZER TRANSFORMER	AS REQUIRED		COMBINATION STARTER/SAFETY SWITCH	AS REQUIRED			
	DOOR BUZZER	54" AFF. (TYP)		MOTOR OUTLET - 1 PHASE	AS REQUIRED			
S1 S3 S4	TOGGLE SWITCH - SINGLE, 3-WAY + 4-WAY	48" AFF. (TYP)		MOTOR OUTLET - 3 PHASE	AS REQUIRED			

FIELD VERIFY ALL CONDITIONS

DESIGN DRAWINGS ARE SCHEMATIC. THIS CONTRACTOR SHALL VISIT THE SITE PRIOR TO BIDDING OR AWARD OF CONTRACT TO INSPECT EXISTING FIELD CONDITIONS. THIS CONTRACT SHALL INCLUDE ALL LABOR AND MATERIALS NECESSARY FOR FIELD MODIFICATIONS DUE TO EXISTING CONDITIONS.

THE CONTRACTOR SHALL CONTACT THE ARCHITECT, ENGINEER OR OWNER PRIOR TO BIDDING FOR INTERPRETATIONS AND CLARIFICATIONS OF THE DESIGN AND INCLUDE IN HIS BID ALL COSTS TO MEET THE DESIGN INTENT. CLARIFICATIONS MADE BY THE ARCHITECT, ENGINEER OR OWNER AFTER BIDDING WILL BE FINAL AND SHALL BE IMPLEMENTED AT CONTRACTORS COST.

BIDDING CONTRACTORS SHALL HAVE A WORKING KNOWLEDGE OF LOCAL CODES AND ORDINANCES AND SHALL INCLUDE IN THEIR BIDS THE COSTS FOR ALL WORK INSTALLED IN STRICT ACCORDANCE WITH GOVERNING CODES, THE PLANS AND SPECIFICATIONS NOTWITHSTANDING. THE CONTRACTOR SHALL ALERT ARCHITECT, ENGINEER OR OWNER OF ANY APPARENT DISCREPANCIES BETWEEN GOVERNING CODES AND DESIGN INTENT.

2 ELECTRICAL SYMBOLS

SCALE: 1/4" = 1'-0"

1. REFER TO MECHANICAL PLAN FOR LOCATION OF MECHANICAL EQUIPMENT. FIELD VERIFY EXACT LOCATIONS.
2. ELECTRICAL CONTRACTOR TO PROVIDE AND INSTALL AT PANEL 'A' TYPED PANEL DIRECTORY WITH ALL CIRCUITS ACCURATELY DESCRIBED PRIOR TO STORE OPENING.
3. ALL RECEPTACLES AND SWITCH PLATES IN SALES AND NON-SALES AREAS TO MATCH WALL OR CEILING FINISH UNLESS DIRECTED OTHERWISE. TYPICAL MOUNTING HEIGHT IS 18" AFF, EXCEPT AT COUNTERS OR IF DIRECTED OTHERWISE.
4. ALL CONDUITS SHALL BE CONCEALED IN WALLS AND OUTLET BOXES SHALL BE FLUSH WITH FINISHED WALL UNLESS OTHERWISE NOTED.
5. ALL WORK SHALL BE IN STRICT ACCORDANCE WITH NATIONAL ELECTRIC CODE AND ALL LOCAL CODES AND ORDINANCES.

3 GENERAL POWER NOTES

4 POWER CODED NOTES

1. 20AMP, 120V, ISOLATED GROUND/DEDICATED CIRCUIT RECEPTACLE (HUBBELL #IG-5362) FOR CASH REGISTERS. DO NOT INSTALL WITH ANY OTHER CIRCUITS. LOCATE RECEPTACLES AT CASHWRAP COUNTER AS DIRECTED BY OWNER/ARCHITECT. RUN 2 #12 THWN AND 1 #12 ISOLATED GRD. PER CIRCUIT IN A COTTON 1" CONDUIT IN FLOOR SLAB TO WALL, UP WALL AND TO PANEL.
2. 1" CONDUITS RUN IN FLOOR. CUT AND PATCH FLOOR AS REQUIRED. COORDINATE FLOOR CUTTING WITH LANDLORD PRIOR TO STARTING WORK.
3. 3/4" CONDUIT FOR CASH REGISTER WIRELESS ACCESS POINT. RUN 3/4" CONDUIT FROM CASH WRAP COUNTER TO DATA OUTLET/JUNCTION BOX AT MANAGER'S DESK. COORDINATE REQUIREMENTS WITH OWNER/ARCHITECT. REFER TO CABLE BLOCK DIAGRAM ON SHEET E4.0.
4. TELEPHONE OUTLET (VOICE). USE 4" SQUARE JUNCTION BOX WITH PHONE JACK AND COVER PLATE. RUN 1" EMPTY CONDUIT WITH PULL WIRE INTO WALL, UP WALL TO STRUCTURE ABOVE, BACK TO TELEPHONE BOARD. SUMMARY OF TELEPHONE LINE REQUIREMENTS:
   (1) LINE REQUIRED AT SUCCURSAL FOR HANDSET
   (1) DEDICATED PHONE LINE AT CASHWRAP FOR CREDIT VERIFICATION EQUIPMENT, MODEM, ETC. REFER TO CABLE BLOCK DIAGRAM ON SHEET E4.0.
5. 20AMP, 120V, DUPLEX RECEPTACLE AT CASH WRAP COUNTER FOR UTILITY POWER. LOCATE RECEPTACLES AT CASH WRAP COUNTER AS DIRECTED BY OWNER. RUN 2 #12 THW AND 1 #12 GRD IN 1" CONDUIT IN FLOOR SLAB TO WALL. RUN UP WALL TO JUNCTION BOX AND CONNECT TO CIRCUIT INDICATED. REFER TO CABLE BLOCK DIAGRAM ON SHEET E4.0.
6. 20AMP, 120V, ISOLATED GROUND/DEDICATED CIRCUIT, RECEPTACLE (HUBBELL #IG-5362) MOUNTED AT 18" AFF. DO NOT INSTALL WITH ANY OTHER CIRCUITS. RUN 2 #12 THWN AND 1 #12 ISOLATED GRD. IN SINGLE 3/4" CONDUIT BACK TO PANEL FOR COMPUTER TERMINAL.
7. EXISTING TELEPHONE BOARD TO REMAIN.
8. PROVIDE A DEDICATED QUAD RECEPTACLE FOR A/V SYSTEM TO BE FURNISHED AND INSTALLED BY AUDIO/VIDEO CONTRACTOR. TENANT E.C. TO ALSO FURNISH AND INSTALL CONDUIT AND PULL WIRE TO ALL A/V LOCATIONS AS REQUIRED BY A/V VENDOR. CONFIRM REQUIREMENTS AND LOCATIONS WITH OWNER PRIOR TO BID.
9. (1) 30 AMP, DOUBLE DUPLEX RECEPTACLE + (1) COAX OUTLET FOR AUDIO AT EACH MONITOR. LOCATE THESE DEVICES 7' DOWN FROM THE TOP OF THE FEATURE WALL. COORDINATE EXACT LOCATION WITH ARCHITECTURAL PLANS.
10. POWER EQUIPMENT. REFER TO POWER RISER ON SHEET E3.0 FOR MORE INFORMATION.
11. RECEPTACLES AND COVERPLATES WITH AN "S" DESIGNATION SHALL BE FLUSH MOUNTED IN CEILING AT STOREFRONT, PARALLEL TO STOREFRONT GLASS. CIRCUIT TO PANEL AS INDICATED. (NEC ART. 210-6?)
12. MOUNT SALES AREA DUPLEX RECEPTACLES AND COVERPLATES AT 18" AFF. WHERE RECEPTACLES ARE LOCATED BEHIND WALL PANELS, MOUNT HORIZONTALLY AT 8" AFF. CIRCUIT TO PANEL AS INDICATED.
13. PROVIDE CONNECTION TO ELECTRIC WATER HEATER PER NEC.
14. RECEPTACLES AND COVERPLATES IN NON-SALES AREA SHALL BE MOUNTED AT 18" A.F.F. UNLESS NOTED OTHERWISE. CIRCUIT TO PANEL AS INDICATED.
15. INSTALL A DELIVERY BUZZER SYSTEM AS SHOWN, INCLUDING EDWARDS #266C-12 PUSH BUTTON AT REAR DOOR, #938 TRANSFORMER, #25 BUZZER IN OFFICE AND IN VESTIBULE AS INDICATED.
16. TENANT E.C. TO PROVIDE 120V, 1 PH. FOR PANIC EXIT DEVICE THAT "SECURITECH" PANIC DEVICE TO BE INSTALLED BY THE TENANT'S CONTRACTOR. A POWER SUPPLY FOR ALARM NEEDS TO BE INSTALLED ADJACENT TO THE DOOR FRAME (ADJACENT TO THE PANIC BAR). CALL "SECURITECH" TECHNICAL SERVICE AT 800/624-3780 FOR ANY INFORMATION.
17. MOUNT DUPLEX RECEPTACLES HORIZONTALLY BELOW COUNTER. COORDINATE EXACT LOCATION WITH CABINET MANUFACTURER.
18. WIRE THROUGH TIME CLOCK. REFER TO SHEET E3.0 FOR MORE INFORMATION.
19. PROVIDE JUNCTION BOX, TOGGLE DISCONNECT SWITCH IN CONCEALED LOCATION AND FINAL CONNECTION FOR 120 VOLT SIGN SIGN FURNISHED BY TENANT. COORDINATE EXACT LOCATIONS WITH TENANT'S CONSTRUCTION MANAGER.
20. REFER TO HVAC CONNECTION SCHEDULE FOR WIRING, CONDUIT, AND CIRCUIT REQUIREMENTS.
21. 1/2" EMPTY CONDUIT WITH PULL STRING FROM RTU-1 TO THERMOSTAT. REFER TO MECHANICAL DRAWINGS FOR EXACT LOCATION.
22. ELECTRICAL CONTRACTOR SHALL FURNISH AND WIRE A DUCT MOUNTED SMOKE DETECTOR. THE DETECTOR SHALL BE INSTALLED IN DUCT WORK BY MECHANICAL CONTRACTOR. ELECTRICAL CONTRACTOR SHALL INTERLOCK SMOKE DETECTOR WITH HVAC UNIT AND FIRE ALARM SYSTEM IF REQUIRED AND MAKE ALL FINAL CONNECTIONS AS REQUIRED FOR A COMPLETE SYSTEM. HVAC UNIT TO SHUT DOWN UPON ACTIVATION OF SMOKE DETECTOR. COORDINATE WITH MECHANICAL CONTRACTOR AND LANDLORD TO AVOID CONFLICTS IN FIELD.

5 TYP. CONDUIT STUB-UP @ CASHWRAP

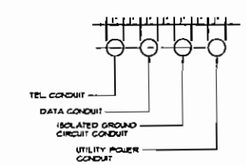

TO ORDER PLANS GO TO WWW.LDIREPRO.COM

FOOT LOCKER, INC.

STORE PLANNING DEPT.
112 WEST 34TH STREET
NEW YORK, NY 10120

ARCHITECTURAL CONSTRUCTION SERVICES
DAVID L. RHODES - MANAGING ARCHITECT
www.acscal.com
P 714.436.9000
F 714.436.9035
Corporate Office
1123 Bristol Street
Costa Mesa, CA 92626

SEAL

ENGINEER

M Retail
Engineers for Success
M Retail Engineering, Inc.
C.O.A. #9190
750 Brooksedge Blvd.
Westerville, Ohio 43081
TEL: 614.818.2323
FAX: 614.818.2337
David F. Gonzalez - Reg. #54327

REVISIONS

NO.	DESCRIPTION	DATE

DATE:	03/12/07
SCALE:	AS SHOWN
GROSS AREA:	2,270 SQ. FT.
SALES AREA:	1,287 SQ. FT.
PROJECT # :	0712040
DRAWN BY:	

FOOTACTION USA

PROJECT TITLE
TYRONE SQUARE
SPACE 110
6901 Tyrone Square
St. Petersburg, FL 33710
STORE NO. 57284

SHEET TITLE
POWER PLAN

SHEET NO. E1.0

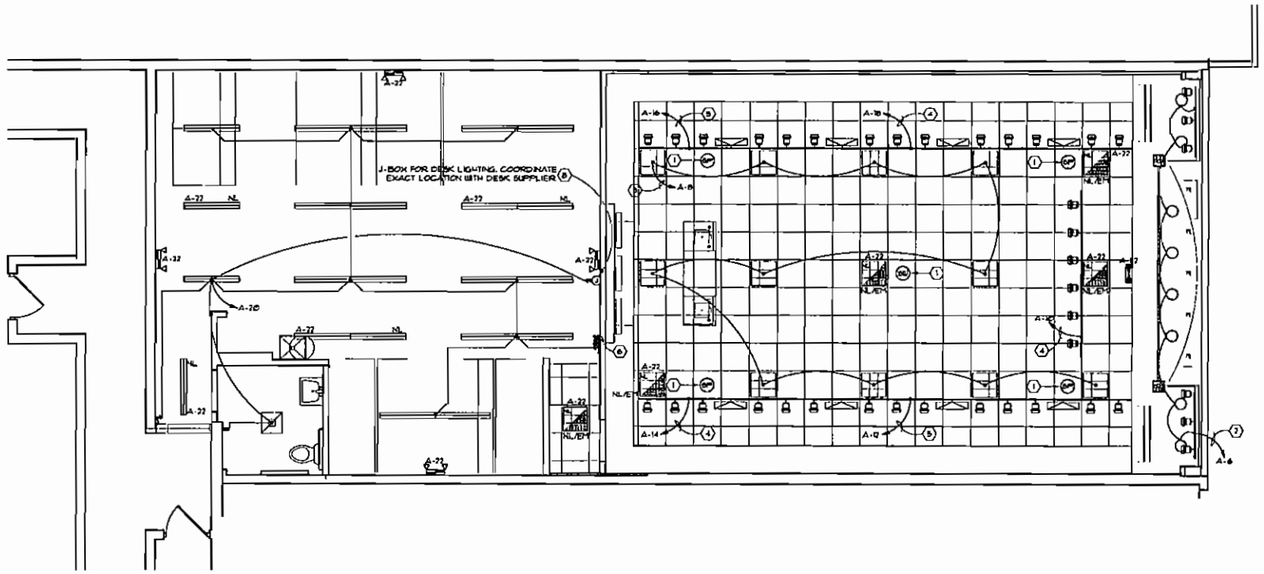

FIELD VERIFY ALL CONDITIONS

DESIGN DRAWINGS ARE SCHEMATIC. THIS CONTRACTOR SHALL VISIT THE SITE PRIOR TO BIDDING OR AWARD OF CONTRACT TO INSPECT EXISTING FIELD CONDITIONS. THIS CONTRACT SHALL INCLUDE ALL LABOR AND MATERIALS NECESSARY FOR FIELD MODIFICATIONS DUE TO EXISTING CONDITIONS.

THE CONTRACTOR SHALL CONTACT THE ARCHITECT, ENGINEER OR OWNER PRIOR TO BIDDING FOR INTERPRETATIONS AND CLARIFICATIONS OF THE DESIGN AND INCLUDE IN HIS BID ALL COSTS TO MEET THE DESIGN INTENT. CLARIFICATIONS MADE BY THE ARCHITECT, ENGINEER OR OWNER AFTER BIDDING WILL BE FINAL AND SHALL BE IMPLEMENTED AT CONTRACTORS COST.

BIDDING CONTRACTORS SHALL HAVE A WORKING KNOWLEDGE OF LOCAL CODES AND ORDINANCES AND SHALL INCLUDE IN THEIR BID THE COSTS FOR ALL WORK INSTALLED IN STRICT ACCORDANCE WITH GOVERNING CODES, THE PLANS AND SPECIFICATIONS NOT WITHSTANDING. THE CONTRACTOR SHALL ALERT ARCHITECT, ENGINEER OR OWNER OF ANY APPARENT DISCREPANCIES BETWEEN GOVERNING CODES AND DESIGN INTENT.

FIRE SPRINKLER SYSTEM:
EXISTING SPACE FIRE SPRINKLER SYSTEM TO BE MODIFIED PER NEW TENANT SPACE DRAWINGS AS REQUIRED BY NFPA STANDARDS AND LOCAL CODES. ALL AREAS TO BE ORDINARY HAZARD GROUP II OCCUPANCY WITH FIRE SPRINKLER FABRICATION DRAWINGS TO BE SUBMITTED BY TENANT FIRE PROTECTION CONTRACTOR TO BUILDING DEPARTMENT BEFORE WORK COMMENCES. ALL SPRINKLER HEADS WILL BE SEMI-RECESSED CHROME TYPE CENTERED IN 2X2 CEILING GRID. SPRINKLER HEADS - NOTE: SYMETRICAL PATTERN TO ALIGN W/ CEILING ELEMENTS

1 LIGHTING PLAN

SCALE: 1/4" = 1'-0"

TYPE	SYMBOL	MANUFACTURER	DESCRIPTION	LAMP	TYPE	SYMBOL	MANUFACTURER	DESCRIPTION
F1		MERCURY	MT-13-2-10TE-LB - 8' - 1 LITE TANDEM FLUORESCENT STRIP W/ PAL 40TBC CRUSH GUARD SAFETY SLEEVE & PAL T8 CAP	F032/830 32W T8 FLUORESCENT LAMP	D7		BROAN	BROAN 7679 RECESSED 70 CFM FAN/LIGHT UNIT WITH (1) 100 W BULB
F1-4		MERCURY	MT-13-2-C-1E-LB-D - 4' - 1 LITE TANDEM FLUORESCENT STRIP W/ PAL 40TBC CRUSH GUARD SAFETY SLEEVE & PAL T8 CAP	F032/830 32W T8 FLUORESCENT LAMP	SQ	SW	JBL	SJ-1 SUB WOOFER
					SP	SP	JBL	SJ-2, SPEAKER
F2/EF1		MERCURY	S-4E340-B1AX-S-EL-EVEN NIGHT/EMERGENCY LIGHT 7.63" PARABOLIC ELECTRONIC BALLAST RECESSED FIXTURE	F42DBX/SPX30 42W BIAX LAMP	E1		JUNO	EK980-WH EXIT LIGHT W/ BATTERY PACK
RD		JUNO	C146-276Q, 6.50C3M 7-26W COMPACT FLUORESCENT DOWNLIGHT	CFM7DT/E835 42 WATT COMPACT FLUOR.	E2		JUNO	EL24 SURFACE MOUNTED EMERGENCY LIGHT MOUNTED AT 9'-6" AFF OR MAX ALLOWABLE BY CODE
A4		LIGHTOLIER	9023UH - CLASSIC BASIC PAR 30 RING-MATTE WHITE	75W/ARS/NFL/AV 75W PAR 30 NARROW FLOOD	SD	SD		SMOKE DETECTOR SUPPLIED AND INSTALLED BY TENANT'S G.C.
TP3		LIGHTOLIER	8275EWLWA LYTEFLOOD L4D COMPACT FLUORESCENT	F42DBX/SPX35 42W BIAX LAMP				
TP		LIGHTOLIER	LYTEBRAN TRACK SYSTEM 8' LTH, 6' LTH, 4' LTH, 2' LTH — SPRING LOADED ATTACHMENT MOUNT DIRECTLY TO LAY-IN CEILING					BANNER TRACK SYSTEM
			EXISTING / RELOCATED PARABOLIC LIGHT FIXTURE					

EX = EXISTING LIGHT TO REMAIN - VERIFY EXISTING QUANTITIES RE = EXISTING LIGHT TO BE RELOCATED - VERIFY EXISTING QUANTITIES NL = DENOTES NIGHT/EMERGENCY LIGHT

2 LIGHT FIXTURE SCHEDULE

1. THE CONTRACTOR FOR THIS WORK IS REQUIRED TO READ THE SPECIFICATIONS AND REVIEW DRAWINGS OF ALL DIVISIONS OF WORK AND IS RESPONSIBLE FOR THE COORDINATION OF THIS WORK AND THE WORK OF ALL SUBCONTRACTORS WITH ALL DIVISIONS OF WORK. IT IS THIS CONTRACTOR'S RESPONSIBILITY TO PROVIDE ALL SUBCONTRACTORS WITH A COMPLETE SET OF BID DOCUMENTS.
2. LIGHTING SHALL BE CIRCUITED EXACTLY AS SHOWN ON PLANS.
3. GENERAL CONTRACTOR TO INSTALL TENANT FURNISHED CRUSH GUARD SAFETY SLEEVES TO ALL STOCKROOM FLUORESCENT LIGHTING.
4. SEE ARCHITECTURAL REFLECTED CEILING PLAN FOR EXACT LOCATION AND QUANTITY OF LIGHTING FIXTURES.
5. EMERGENCY AND EXIT LIGHTS SHALL BE INSTALLED AND CIRCUITED PER THE LATEST NATIONAL ELECTRICAL CODE AND ALL LOCAL CODES. ALL EMERGENCY AND EXIT FIXTURES SHALL BE DUAL VOLTAGE (120/277 VOLT INPUT) WITH BATTERY BACKUP.
6. ELECTRICAL CONTRACTOR SHALL MAKE ALL FINAL CONNECTIONS AS REQUIRED FOR A FULLY COMPLETE AND OPERABLE SYSTEM.

3 LIGHTING GENERAL NOTES

1. TENANT E.C. TO FURNISH AND INSTALL CONDUIT AND PULL WIRE TO ALL A/V LOCATIONS AS REQUIRED BY A/V VENDOR. CONFIRM REQUIREMENTS AND LOCATIONS WITH OWNER PRIOR TO BID.
2. WIRE THROUGH A 4 POLE CONTACTOR CONTROLLED BY A TIME SWITCH. CONTACTOR AND TIME SWITCH SHALL BE AS SPECIFIED IN SPECIFICATIONS AND MOUNTED ADJACENT TO LIGHTING PANEL. REFER TO SHEET E3.0 AND SPECIFICATIONS FOR MORE INFORMATION.
3. HOMERUN THROUGH A 2 POLE CONTACTOR CONTROLLED BY SWITCH "a". CONTACTOR SHALL BE AS SPECIFIED IN SPECIFICATIONS AND MOUNTED ADJACENT TO LIGHTING PANEL. SEE MASTER LIGHTING SWITCH BANK DETAIL ON THIS SHEET AND "POWER RISER" ON SHEET E3.0.
4. HOMERUN THROUGH A 4 POLE CONTACTOR CONTROLLED BY SWITCH "b". CONTACTOR SHALL BE AS SPECIFIED IN SPECIFICATIONS AND MOUNTED ADJACENT TO LIGHTING PANEL. SEE MASTER LIGHTING SWITCH BANK DETAIL ON THIS SHEET AND "POWER RISER" ON SHEET E3.0.
5. HOMERUN THROUGH A 2 POLE CONTACTOR CONTROLLED BY SWITCH "c". CONTACTOR SHALL BE AS SPECIFIED IN SPECIFICATIONS AND MOUNTED ADJACENT TO LIGHTING PANEL. SEE MASTER LIGHTING SWITCH BANK DETAIL ON THIS SHEET AND "POWER RISER" ON SHEET E3.0.
6. MASTER LIGHTING SWITCH BANK. SEE DETAIL "S" ON THIS SHEET.
7. CONNECT EMERGENCY, EXIT, AND NON LIGHTING FIXTURES TO CIRCUIT A-22 (TYPICAL). PROVIDE AND INSTALL A SCREW TYPE LOCK-ON DEVICE AT THE CIRCUIT BREAKER.
8. JUNCTION BOX FOR DESK LIGHTING. COORDINATE EXACT LOCATION WITH DESK SUPPLIER.

4 LIGHTING CODED NOTES

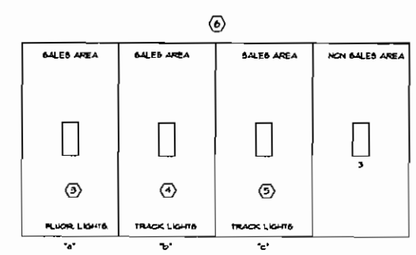

5 MASTER LIGHTING SWITCH BANK

TO ORDER PLANS GO TO WWW.LDIREPRO.COM

FOOT LOCKER, INC.

STORE PLANNING DEPT.
112 WEST 34TH STREET
NEW YORK, NY 10120

ARCHITECTURAL CONSTRUCTION SERVICES
DAVID L. BURNS - MANAGING ARCHITECT
www.dacsl.com
P 714.436.9800
F 714.436.9805
Corporate Office
1133 Bristol Street
Costa Mesa, CA 92626

SEAL

ENGINEER
Retail
Institute for Research
M Retail Engineering, Inc.
C.O.A. #9190
700 Brooksedge Blvd.
Westerville, Ohio 43081
TEL: 614 818 2323
FAX: 614 818 2327
David F. Gonzalez - Reg. #54327

REVISIONS

NO.	DESCRIPTION	DATE

DATE:	03/12/07
SCALE:	AS SHOWN
GROSS AREA:	2,270 SQ. FT.
SALES AREA:	1,287 SQ. FT.
PROJECT # :	0712040
DRAWN BY:	

FOOTACTION USA

PROJECT TITLE
TYRONE SQUARE
SPACE 110
6901 Tyrone Square
St. Petersburg, FL 33710

STORE NO. 57284

SHEET TITLE
LIGHTING PLAN

SHEET NO. E2.0

HVAC CONNECTION SCHEDULE

EQUIP NAME	VOLTAGE	FLA/HP/KW	WIRE	CONDUIT	DISCONNECT	CIRCUIT
RTU-1	208V 3Ø	37.1 FLA	3 #6 THWN, 1 #8 GRD.	3/4"	60A NON-FUSED # UNI	A-40/42/44

Panel Wiring Schedule (3-Phase)

Fireboard EXISTING "A" Voltage 120/208 Phase 3 Wire 4 A/C Rating EXISTING
Panel Type EXIST. SQUARE "D" Main: EXIST 200 A MCB Main Rating EXIST. 225A
NEMA Type Enclosure 1 Mounting SURFACE Options --- Note VERIFY

Ckt. No	Load Description	Brkr Size ▲	Brkr Opts	N.E.C. KW A	N.E.C. KW B	N.E.C. KW C	Phase	N.E.C. KW A	N.E.C. KW B	N.E.C. KW C	Brkr Opts	Brkr Size ▲	Load Description	Ckt. No.
1	HVAC REC			0.360			A	1.200			LO		SIGN	2
3	BF REC		LO		0.360		B		1.200		LO		SIGN	4
5	CASH REGISTER		LO			0.216	C			1.560	LO		BF LTS	6
7	CASH REGISTER		LO	0.216			A	1.320					SALES LTS	8
9	CASHWRAP REC				0.360		B		0.500				TRACK LTS	10
11	VIDEO MONITOR					1.050	C			1.360			TRACK LTS	12
13	SALES RECEPT.			0.540			A	1.350					TRACK LTS	14
15	WH				1.500		B		1.350				TRACK LTS	16
17	SOUND SYS.					0.360	C			1.350			TRACK LTS	18
19	COMPUTER		LO	0.360			A	1.200					NON SALES LTS	20
21	SPARE				0.000		B		0.850		LO		NUSTREX	22
23	NON SALES REC					1.080	C			0.000			SPARE	24
25	PHONE BOARD		LO	0.120			A	0.000					SPARE	26
27	SPARE				0.000		B		0.000				SPARE	28
29	SPARE					0.000	C			0.000			SPARE	30
31	SPARE			0.000			A	0.000					SPARE	32
33	SPARE				0.000		B		0.000				SPARE	34
35	SPARE					0.000	C			0.000			SPARE	36
37	SPARE			0.000			A	0.000					SPARE	38
39	SPARE				0.000		B		5.664					40
41	SPARE					0.000	C			5.664	60/3		RTU-1	42
43	SPACE			---			A	5.664						44
45	SPACE				---		B		---				SPACE	46
47	SPACE					---	C			---			SPACE	48
49	SPACE			---			A	---					SPACE	50
51	SPACE				---		B		---				SPACE	52
53	SPACE					---	C			---			SPACE	54

GRILLE

NOTES
ALL CIRCUIT BREAKERS TO BE 20-AMP, 1-POLE UNLESS OTHERWISE NOTED.

N.E.C. CONNECTED TOTALS: A 17.859 KW
B 17.164 KW
C 19.319 KW
TOTAL 36.522 KW

(ALL PHASES TO BE BALANCED TO WITHIN 10% USING ACTUAL LOAD TOTALS.)

BREAKER OPTIONS:
AS - POWERLINK AS BREAKER
LO - HANDLE LOCK-OFF DEVICE
ST - SHUNT TRIP TYPE
AUX - AUXILIARY CONTACTS
PA - HANDLE PADLOCK ATTACHMENT
GFCI - GROUND FAULT CIRCUIT INTERRUPTER
HACR - HEATING, A/C & REFRIGERATION
SP - SUBFEED

ELECTRIC LOAD SUMMARY

120/208V SYSTEM

DESCRIPTION	N.E.C. CONNECTED KW/KVA	POWER FACTOR	N.E.C. DEMAND FACTOR	N.E.C. DEMAND KVA
LIGHTING (CONTINUOUS)	13.070	▲	1.25	16.275
RECEPTACLES	5.010	1.0	1.0 (FIRST) 0.5 (REMAINING KW)	5.010
MOTORS	---	0.9	1.0 +25% LARGEST	---
FIXED ELECTRIC SPACE HEATING AIR CONDITIONING SYSTEM	16.457 *	1.0	1.0 ** +25% LARGEST	--- *
	16.457 *	1.0		20.556 *
ELECTRIC WATER HEATER	1.500	1.0	1.0	1.500
MISCELLANEOUS	---	1.0	1.0	---
TOTAL	36.522			43.341

NOTES
* USE GREATER VALUE OF THE TWO CATEGORIES
** 0.5% OF THE LARGEST MOTOR OR COMPRESSOR IN SYSTEM APPLIED ONLY ON ONE UNIT.
▲ POWER FACTOR IS ALREADY INCLUDED IN LIGHTING LOAD.

N.E.C. DEMAND KVA X 1000 / SYSTEM VOLTAGE X √3 = MINIMUM FEEDER AMPERAGE

43.341 X 1000 / 208 X 1.732 = 120.38 AMPS

REUSE EXISTING 200 AMP SERVICE

ELEC. CONTR. SHALL VERIFY ALL EXISTING ELECTRICAL SERVICE CONDITIONS PRIOR TO BID. E.C. TO REUSE EXISTING INCOMING SERVICE, JUNCTION BOX, METER WIRE AND CONDUIT (IF IN GOOD CONDITION AND SIZED APPROPRIATELY) OR FURNISH AND INSTALL NEW. REUSE OF ANY EXISTING ELECTRICAL EQUIPMENT SHALL BE REFLECTED IN BID.

ELECTRICAL CONTRACTOR SHALL CONFIRM/VERIFY ALL EXISTING CONDITIONS IN THE FIELD AND NOTIFY STORE'S CONSTRUCTION MANAGER OF ANY DISCREPANCIES BETWEEN THESE PLANS AND ACTUAL FIELD CONDITIONS PRIOR TO BIDS.

EXACT LOCATION OF EXISTING CIRCUITS IN PANELS SHALL BE VERIFIED IN FIELD.

ELECTRICAL CONTRACTOR SHALL VERIFY EXACT AMP DRAW ON ALL EXISTING CIRCUITS/PANELS TO BE REUSED TO ENSURE OVERLOADING CONDITION DOES NOT OCCUR PRIOR TO ADDING ADDITIONAL ITEMS TO CIRCUITS/PANELS

TENANT'S ELECTRICAL CONTRACTOR TO REUSE EXISTING ELECTRICAL EQUIPMENT. VERIFY THAT IT IS IN GOOD OPERATING CONDITION, MEETS ALL CODES, AND MATCHES THE CAPACITIES AND CHARACTERISTICS OF THE EQUIPMENT INDICATED ON THESE DRAWINGS AND SPECIFICATIONS. REUSED EQUIPMENT MUST HAVE THE TERMINALS CLEANED AND ALL FUSES AND CIRCUIT BREAKERS MUST BE REPLACED WITH NEW. THIS CONTRACTOR SHALL GUARANTEE ALL EXISTING EQUIPMENT REUSED FOR THE DURATION OF THIS CONTRACT GUARANTEE. IF EXISTING ELECTRICAL EQUIPMENT IS NOT ABLE TO BE REUSED CONTACT ARCHITECT/ENGINEER.

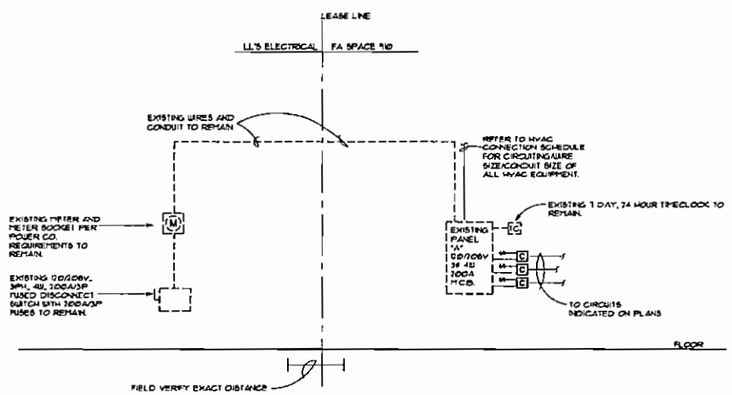

1 POWER RISER AND SCHEDULES

N.Y.S.

1. HVAC CIRCUIT BREAKERS SHALL BE "HACR" TYPE WHERE REQUIRED BY EQUIPMENT NAMEPLATE PER N.E.C.
2. TENANTS ELECTRICAL CONTRACTOR SHALL FIELD VERIFY EXACT A.I.C. RATING OF LANDLORDS DISTRIBUTION EQUIPMENT. FURNISH AND INSTALL TENANTS SYSTEM TO MATCH
3. ELECTRICAL CONTRACTOR SHALL BALANCE ALL PANELS AND ELECTRICAL EQUIPMENT TO 10% BETWEEN PHASES- A/B, B/C, A/C REGARDLESS OF CIRCUITING INDICATED.
4. PROPER CLEARANCE MUST BE MAINTAINED ABOUT ELECTRICAL EQUIPMENT PER N.E.C. FIELD VERIFY EXACT MOUNTING SPACE AVAILABLE IN ELECTRICAL ROOM/AREA PRIOR TO INSTALLATION OF ELECTRICAL EQUIPMENT.
5. ELECTRICAL CONTRACTOR SHALL MAKE ALL FINAL ELECTRICAL CONNECTIONS FOR A COMPLETE ELECTRICAL DISTRIBUTION SYSTEM.
6. BOND NEUTRAL TO GROUND AT DISCONNECT SWITCH IF NOT BONDED ON LINE SIDE OF DISCONNECT SWITCH. IF NEUTRAL IS BONDED ON LINE SIDE OF DISCONNECT SWITCH, DO NOT BOND AT DISCONNECT SWITCH.
7. MAXIMUM LENGTH OF TAP CONDUCTORS ON TRANSFORMER SECONDARY SHALL NOT EXCEED 10'-0" IN LENGTH.
8. FIELD VERIFY EXACT MOUNTING SPACE AVAILABLE IN ELECTRICAL ROOM/AREA PRIOR TO INSTALLATION OF ELECTRICAL EQUIPMENT
9. EQUIPMENT NAMEPLATE PER N.E.C.

2 POWER RISER GENERAL NOTES

FIELD VERIFY ALL CONDITIONS

DESIGN DRAWINGS ARE SCHEMATIC. THIS CONTRACTOR SHALL VISIT THE SITE PRIOR TO BIDDING OR AWARD OF CONTRACT TO INSPECT EXISTING FIELD CONDITIONS. THIS CONTRACT SHALL INCLUDE ALL LABOR AND MATERIALS NECESSARY FOR FIELD MODIFICATIONS DUE TO EXISTING CONDITIONS

THE CONTRACTOR SHALL CONTACT THE ARCHITECT, ENGINEER OR OWNER PRIOR TO BIDDING FOR INTERPRETATIONS AND CLARIFICATIONS OF THE DESIGN AND INCLUDE IN HIS BID ALL COSTS TO MEET THE DESIGN INTENT. CLARIFICATIONS MADE BY THE ARCHITECT, ENGINEER OR OWNER AFTER BIDDING WILL BE FINAL AND SHALL BE IMPLEMENTED AT CONTRACTORS COST.

BIDDING CONTRACTORS SHALL HAVE A WORKING KNOWLEDGE OF LOCAL CODES AND ORDINANCES AND SHALL INCLUDE IN THEIR BIDS THE COSTS FOR ALL WORK INSTALLED IN STRICT ACCORDANCE WITH GOVERNING CODES. THE PLANS AND SPECIFICATIONS NOT WITHSTANDING. THE CONTRACTOR SHALL ALERT ARCHITECT, ENGINEER OR OWNER OF ANY APPARENT DISCREPANCIES BETWEEN GOVERNING CODES AND DESIGN INTENT.

TO ORDER PLANS GO TO WWW.LDIREPRO.COM

FOOT LOCKER, INC.

STORE PLANNING DEPT.
112 WEST 34TH STREET
NEW YORK, NY 10120

ARCHITECTURAL CONSTRUCTION SERVICES
DAVID L. HARRIS • MANAGING ARCHITECT
www.ACS1.com
P 714.436.9000
F 714.436.9085
Corporate Office
1223 Bristol Street
Costa Mesa, CA 92626

SEAL

ENGINEER
Retail
A division of Epsilon
M Retail Engineering, Inc.
C.O.A. #9190
750 Brooksedge Blvd.
Westerville, Ohio 43081
TEL: 614 818 3333
FAX: 614 818 3337
David F. Gonzalez - Reg. #54327

REVISIONS

NO.	DESCRIPTION	DATE

DATE:	03/12/07
SCALE:	AS SHOWN
GROSS AREA:	2,270 SQ. FT.
SALES AREA:	1,287 SQ. FT.
PROJECT # :	0712040
DRAWN BY:	

FOOTACTION USA

PROJECT TITLE
TYRONE SQUARE
SPACE 110
6901 Tyrone Square
St. Petersburg, FL 33710
STORE NO. 57284

SHEET TITLE
ELECTRICAL POWER RISER & SCHEDULES

SHEET NO. E3.0

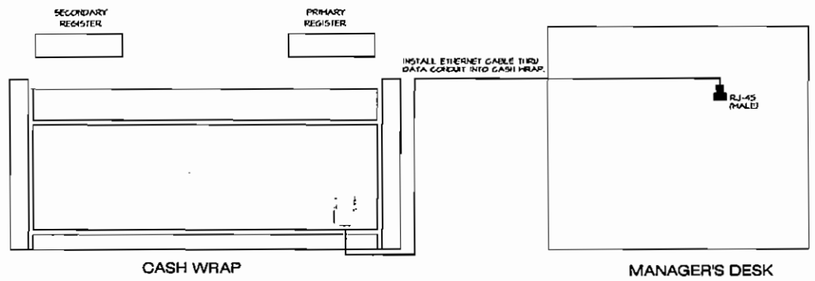

(A) CABLE BLOCK WIRING DIAGRAM

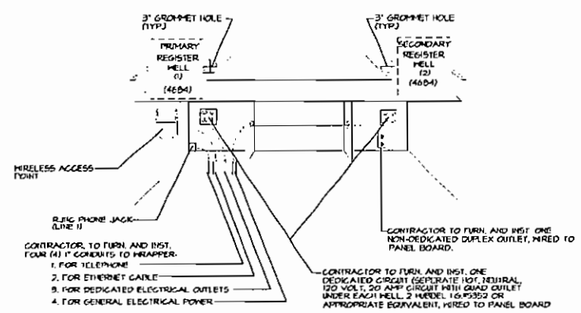

(B) DOUBLE CASH REGISTER WIRING DETAIL

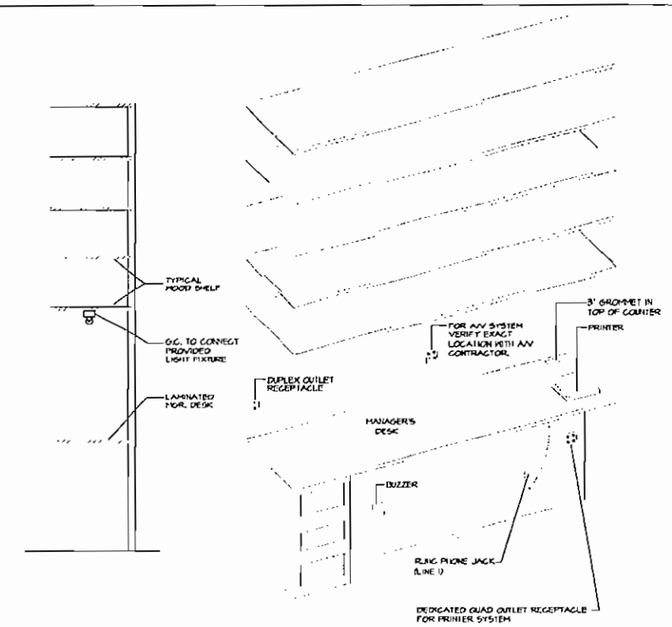

(C) MANAGER DESK WIRING DETAIL

RJ-45 MODULAR CONNECTOR

TWISTED PAIR	PIN#	SIGNAL
1	1	TD+
1	2	TD-
2	3	RD+
3	4	NOT USED
3	5	NOT USED
2	6	RD-
4	7	NOT USED
4	8	NOT USED

RJ-45 MODULAR CONNECTOR

PIN#	SIGNAL
1	TD+
2	TD-
3	RD+
4	NOT USED
5	NOT USED
6	RD-
7	NOT USED
8	NOT USED

CABLE'S SENT ARE TERMINATED, USE ONLY AS A REFERENCE IF CABLE ENDS ARE REMOVED

(D) RJ-45 PLUG WIRING DIAGRAM

1. CONTRACTOR SHALL INSTALL AN ETHERNET CABLE (TWISTED SHIELDED CABLE) FROM THE MANAGER'S DESK TO CASH WRAP THRU DATA CONDUIT, AND TERMINATE CABLE IN CASH WRAP.

   NOTE: DO NOT TERMINATE CABLE NEAR OR ON METAL POLES OR RACKS

2. LABLE CABLE AT MANAGER'S DESK AS 'ACCESS POINT'.
3. CONTRACTOR SHALL INSTALL CABLE LEAVING ANY AND ALL SLACK COIL IN MANAGER'S AREA WITH A MINIMUM OF 12" SLACK AT CASH WRAP.
4. MATERIALS TO BE SUPPLIED BY FOOT LOCKER.

   NOTE: IF FOOT LOCKER SUPPLIED ETHERNET CABLE EXCEEDS 75'-0" FROM MANAGER'S DESK TO CASH WRAP, CONTRACTOR TO SUPPLY REPLACEMENT CABLE AS NEEDED, AND RETURN UNUSED CABLE BACK TO CABLE COMPANY.

5. CONTRACTOR SHALL MAINTAIN A MINIMUM CLEARANCE OF 18 INCHES FROM ALL NOISE EMANATING ELECTRICAL EQUIPMENT (e.g. BALLASTS, POWER FEEDER CABLES, ETC.) FOR ENTIRE CABLE RUN
6. CONTRACTOR SHALL PERFORM A CONTINUITY CHECK FOR EACH CONDUCTOR TERMINATED AT EACH END OF THE INSTALLED CABLES, INCLUDING CABLE SHIELD.
7. CONTRACTOR SHALL LEAVE ONE AS BUILT COPY OF THIS DRAWING WITH STORE MANAGER(S).

(E) GENERAL NOTES

TO ORDER PLANS GO TO WWW.LDIREPRO.COM

FOOT LOCKER, INC.

STORE PLANNING DEPT.
112 WEST 34TH STREET
NEW YORK, NY 10120

ARCHITECTURAL CONSTRUCTION SERVICES
DAVID L. HOWARD - MANAGING ARCHITECT
www.acsrl.com
P 714.436.9000
F 714.436.9039
Corporate Office
1537 Bristol Street
Costa Mesa, CA 92626

SEAL

ENGINEER

M Retail Engineering, Inc.
C.O.A #9190
750 Brookridge Blvd.
Westerville, Ohio 43081
TEL: 614 818 2323
FAX: 614 818 2337
David F. Gonzalez - Reg. #54327

REVISIONS

NO.	DESCRIPTION	DATE

DATE:	03/12/07
SCALE:	AS SHOWN
GROSS AREA:	2,270 SQ. FT.
SALES AREA:	1,267 SQ. FT.
PROJECT # :	0712040
DRAWN BY:	

FOOTACTION USA

PROJECT TITLE
TYRONE SQUARE
SPACE 110
6901 Tyrone Square
St. Petersburg, FL 33710

STORE NO. 57284

SHEET TITLE
ELECTRICAL DETAILS

SHEET NO. E4.0