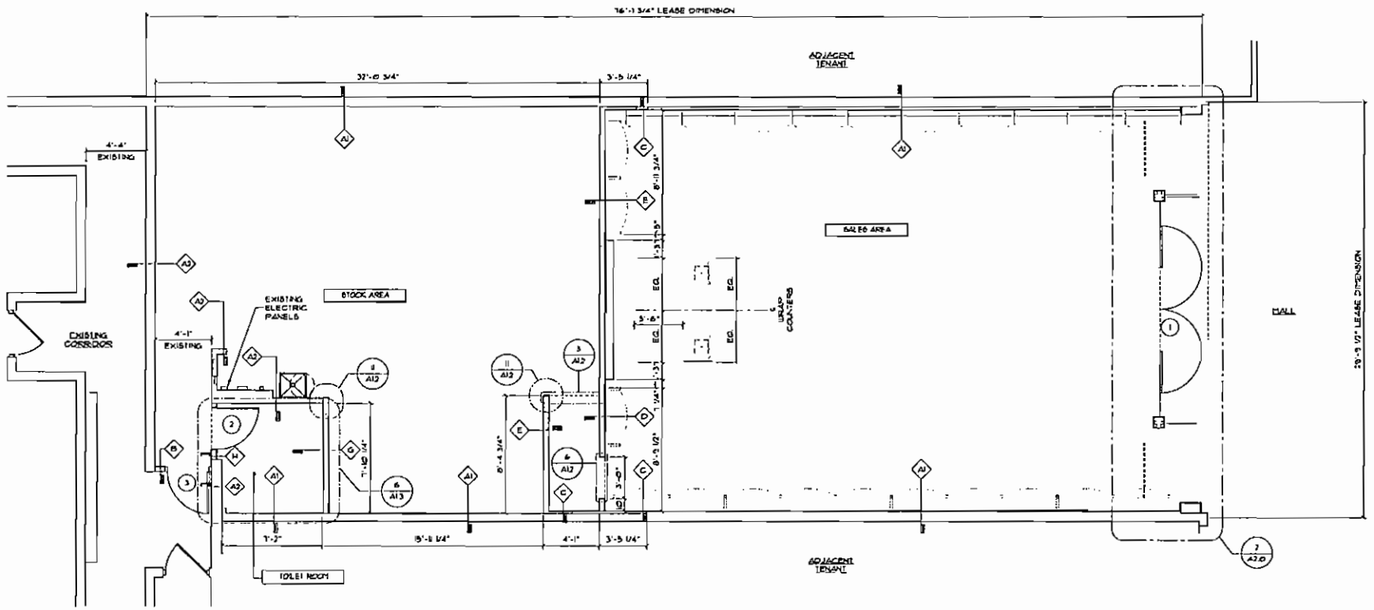

FOR PARTITION TYPES & DETAILS SEE SHEET A1.1

CONSTRUCTION PLAN

SCALE: 1/4" = 1'-0"

CONSTRUCTION NOTES

1. INSPECT THE CONDITION OF EXISTING DEMISING PARTITIONS & COMMON WALLS AND PROVIDE FULL HEIGHT & FINISHED PARTITION TO UNDERSIDE OF DECK AS REQUIRED. PATCH AND REPAIR TO ACHIEVE OR MAINTAIN RATED FIRE RATING - TAPE AND SPACKLE TO PREPARE FOR FINISHES
2. UPON POSSESSION OF THE PREMISES, ENTIRE SPACE DIMENSION SHALL BE VERIFIED. G.C. SHALL SUBMIT NOTED DISCREPANCIES TO THE OWNER, ARCHITECT, AND MILLWORK CONTRACTOR WITHIN 3 DAYS OF THE START OF CONSTRUCTION.
3. WHEN RE-USING EXISTING DRYWALL CONSTRUCTION, PATCH AND REPAIR WALLS AS NECESSARY TO ENSURE ONE HOUR RATING. PATCH ALL VOIDS INCLUDING DECK FLUES WITH NON-COMBUSTIBLE MATERIALS.
4. STORE FRONT IS TO BE SUPPORTED FROM THE FINISHED FLOOR ON BY STRUCTURAL MEMBERS ONLY, AND ARE NOT TO BE ATTACHED TO OR SUPPORTED BY THE BACKHEAD OR SURROUND. ONLY APPROVED HORIZONTAL BRACING TO THE STRUCTURE WILL BE ALLOWED. REFER TO LANDLORD CRITERIA DETAILS.
5. ALL SLAB PENETRATIONS MUST BE APPROVED IN WRITING BY THE TENANT COORDINATOR PRIOR TO THE COMMENCEMENT OF WORK. GENERAL CONTRACTOR SHALL ENSURE THAT ALL SLAB PENETRATIONS WITHIN THE TENANT'S PREMISES ARE PROPERLY SEALED AND REMAIN WATERTIGHT TO PREVENT POSSIBLE DAMAGE.
6. ALL DIMENSIONS ON PLAN FOR NEW INTERIOR WALL LAYOUTS ARE FROM FINISHED WALL TO FINISHED WALL UNLESS NOTED OTHERWISE.
7. PATCH & FIRE STOP EXIST. PARTITIONS AS REQD BY LOCAL CODES.
8. WRITTEN DIMENSIONS TAKE PRECEDENCE OVER SCALE ON THE CONSTRUCTION DOCUMENTS. DO NOT SCALE.
9. APPROVED FIRE EXTINGUISHERS SHALL BE INSTALLED AS REQUIRED BY LOCAL FIRE MARSHALL.
10. ALL PENETRATIONS OF FIRE RESISTIVE FLOORS OR SHAFT WALLS SHALL BE PROTECTED BY MATERIALS AND INSTALLATION DETAILS THAT CONFORM TO UL STANDARDS FOR THROUGH PENETRATIONS FIRE STOP SYSTEMS. THE CONTRACTOR SHALL SUBMIT SHOP DRAWING DETAILS WHICH SHOW COMPLETE CONFORMANCE TO THE UL LISTING TO THE ARCHITECT. SUCH DRAWINGS SHALL BE AVAILABLE TO ANY CITY INSPECTORS. THE DRAWINGS SHALL BE SPECIFIC FOR EACH PENETRATION WITH ALL VARIABLES DEFINED.
11. PROVIDE DIAGONAL BRACING TO STRUCTURE ABOVE ALL DOORS, GLAZING HEADS AND JAMBS AS REQUIRED TO MAKE ASSEMBLY RIGID.
12. PROVIDE & INSTALL BROWN PAPER COVERING TO THE STOREFRONT GLAZING DURING MERCHANDISING.
13. MOBILE SHELVING UNITS WHEN SPECIFIED: PROVIDE A SMOOTH LEVEL FLOOR FOR INSTALLATION OF UNITS. INSTALL UNITS PER MFG. INSTRUCTIONS AND GUIDELINES. ADVISE TENANT CONSTRUCTION MANAGER IMMEDIATELY SHOULD ANY FIELD CONDITIONS IMPACT PROPER INSTALLATION.
14. WHEN EXPANSION JOINTS EXIST, TENANT G.C. TO FURNISH AND INSTALL MOVEMENT JOINTS (MO LTD 3740-090 OR EQUIVALENT

DOOR AND FRAME SCHEDULE

DOOR NUMBER	DOOR TYPE (B/A12)	SIZE/LOCATION	FINISH	FRAME MAT.	HDW. GR.	H/J DETAIL	THRESH DETAIL	RATING	REMARKS
1	-	3'-0" X 8'-0" PAIR MALL TO BALES	GLASS	-	1	-	-	-	
2	B	3'-0" X 6'-8" X 1 1/8" STOCK TO TOILET	PTD - FAP-1	WOOD	3	-	-	-	SEE NOTES * 8
3	A	3'-0" X 7'-0" X 1 3/4" STOCK TO EXIT	PTD - FAP-1	METAL	5	4-5/A12	-	45 MIN.	SEE NOTES * 3, 4, 7, 9

(X) DENOTES AN EXISTING DOOR

ALL HARDWARE TO COMPLY WITH ADA/AG AND LOCAL HANDICAPPED CODE REQUIREMENTS
ALL EGRESS DOORS SHALL BE OPERABLE FROM THE INSIDE WITHOUT THE USE OF A KEY OR SPECIAL KNOWLEDGE

HARDWARE SETS

SET NO. 1	SET NO. 2A	SET NO. 2B	SET NO. 3	SET NO. 4	SET NO. 5
ON LEADING OR OPPOSITE LEAF: 1 - HEAVY-DUTY BOTTOM DOOR PATCH SPACER FOR DOOR PATCH - MATCHING FINISH OF DOOR PATCH SPACER OF PROPER THICKNESS TO PROVIDE FLUSH PANEL FRAME LOOK. ONLY ON SINGLE PATCH DOOR. ALSO ON DOUBLE PATCH DOOR WHEN ONLY ONE LEAF HAS POWERED OVERHEAD CONCEALED FLOOR PIVOT. NO OTHER OPTIONS. PROVIDE SPACER WITH PATCH TO MATCH ABOVE. FINISH TO BE BRUSHED STAINLESS	DOOR TO EGRESS 1 1/2 - PAIR OF BUTTS 1 - LATCH SET 1 - WALL STOP 3 - SILENCERS 2 - KICK PLATES 1 - CLOSER	NON-EGRESS DOOR 1 1/2 - PAIR OF BUTTS 1 - CORB LATCH LOCK 1 - WALL STOP 3 - SILENCERS 3 - KICK PLATES 1 - CLOSER	1 1/2 - PAIR OF BUTTS 1 - CORB LATCH LOCK 1 - WALL STOP 3 - SILENCERS 2 - KICK PLATES. 1 - WALL STOP SATIN CHROME	(3) STANLEY FT79 FREE-SWING BUTT HINGES, SATIN CHROME 4-1/2"x4-1/2" FN 2A10 (1) SCHLAGE F-10 JAZZ PASSAGE LATCH LEVER TYPE SATIN CHROME, FN 626 (1) NO DOOR STOP (INTEGRAL WITH HINGE/BUTT) FOR FITTING ROOM DOORS ONLY (1) DOOR STOP	1 1/2 - PAIR OF BUTTS PANIC HARDWARE SET - A, B, C OR D 1 - WALL STOP 2 - KICK PLATES 1 - SURFACE MTD CR (3/4 HR. DOOR) 1 - CLOSER 1 - PEEP HOLE 1 - WALL STOP SATIN CHROME

BUTTS: HOCKNEY STANDARD WEIGHT 9 KNUCKLE BEARING HINGES T1B3714, 4-1/2" X 4"
LATCH SET: SARGENT 6200 LINE LEVER TYPE
LOCK SET: SARGENT LINE LEVER TYPE
PRIVACY LOCK SET: SARGENT 10 LINE LEVER TYPE
CLOSER: RUSKIN DC3720DO
WALL STOP: IVES "401 1/2" - 630D FINISH
KICK PLATE: IVES, 10400 (1" x 36"

SILENCER: IVES NO. 70
CORB. LOCK LATCH: ILCO 1011 SIMPLEX
REDUCER STRIP: SEE SILL DETAILS

LEVEL 1 SECURITY SPEC ENCLOSED MALL STORES
PANIC HARDWARE SET "A"
70XM2007 PANEX EXIT DEVICE - ALARMED/FIRE RATED/AC POWERED
70LM480M00 DOOR LOOP - FOR AC POWER

DOOR HARDWARE NOTES

1. ALL HARDWARE REPRESENTS THE MINIMUM QUALITY, STYLE AND APPEARANCE.
2. IF NEW, ALL HARDWARE IS TO BE 626 FINISH. DOOR HARDWARE SHALL BE MOUNTED AT NOT LESS THAT 36" OR MORE THAN 48" ABOVE FLOOR.
3. PROVIDE WEATHER STRIPPING AND ADA THRESHOLD AT EXTERIOR DOORS. ALL THRESHOLDS SHALL NOT EXCEED 1/2" RISE HEIGHT.
4. A NEW SECURITY EXIT DEVICE WILL BE FURNISHED AND INSTALLED BY SECURITY SOLUTIONS. 405-316-1800 (TENANT G.C. TO PROVIDE POWER SUPPLY (120V SINGLE PHASE) CONNECTION FOR THE ALARM. INSTALLED ADJACENT TO THE PANIC BAR ON THE HINGE SIDE OF THE DOOR FRAME. PULL THE LOW VOLTAGE WIRE FROM THE LOCK TO TERMINAL STRIP IN THE POWER SUPPLY.
5. EXIT DOORS SHALL BE OPERABLE FROM THE INSIDE WITHOUT THE USE OF A KEY OR ANY SPECIAL KNOWLEDGE OR EFFORT.
6. HARDWARE AT SERVICE DOOR SHALL BE BUILDING STANDARD AS WHEN REQUIRED BY THE LANDLORD CRITERIA.
7. REPLACE DAMAGED OR MISSING HARDWARE. REPLACE LOCK CYLINDERS AND PROVIDE TENANT WITH (2) NEW KEYS.
8. UNDER CUT TOILET ROOM DOOR 1" TO PROVIDE AIR FLOW.
9. REPLACE STANDARD EXTERIOR SALES DOOR HARDWARE. DOORS END EXISTING AND PROVIDE TENANT WITH (2) KEYS (BY SECURITY VENDOR)

DOOR HARDWARE NOTES - ADA

FOR REFERENCE ONLY:

ADA 4.13.5 - DOOR WIDTH AND HEIGHTS
REQUIRED EXIT DOORWAYS ARE TO HAVE A CLEAR OPENING NOT LESS THAN 32 INCHES WIDE. FOR HINGED DOORS, THE OPENING IS MEASURED WITH THE DOOR AT A 90-DEGREE ANGLE FROM ITS CLOSED POSITION. AT LEAST ONE OF A PAIR OF DOORS, INCLUDING AUTOMATIC DOORS, HAS TO PROVIDE THE 32-INCH CLEAR OPENING. DOOR HEIGHTS ARE REQUIRED TO BE A MINIMUM OF 80 INCHES. ALTHOUGH SECTION 33 RELATES TO REQUIRED EXITS, ARTICLES 8 THROUGH 14 ALSO REQUIRE SPECIFIC AREAS TO BE ACCESSIBLE. DOORS TO THESE AREAS WOULD ALSO HAVE TO HAVE A 32-INCH CLEAR OPENING.

ADA 4.13.8 - THRESHOLDS:
THRESHOLDS ARE REQUIRED TO BE NO MORE THAN 1/2" INCH HIGH. BEVEL OR SLOPE THE EXPOSED EDGE AT ANY ANGLE NOT EXCEEDING 45 DEGREES SO THAT NO SINGLE VERTICAL CHANGE OF ELEVATION EXCEEDS 1/4" INCH.

ADA 4.13.9 - HARDWARE:
HAND ACTIVATED DOOR OPENING HARDWARE IS REQUIRED TO BE CENTERED BETWEEN 30 AND 44 INCHES HIGH. LATCHING AND LOCKING DOORS THAT ARE HAND ACTIVATED AND WHICH ARE IN A PATH OF TRAVEL HAVE TO BE OPERABLE WITH A SINGLE EFFORT BY LEVER TYPE HARDWARE, BY PANIC BARS, PUSH-PULL ACTIVATING BARS, OR OTHER HARDWARE DESIGNED TO PROVIDE PASSAGE WITHOUT REQUIRING THE ABILITY TO GRASP THE OPENING HARDWARE. LOCKED EXIT DOORS ARE REQUIRED TO OPERATE AS DESCRIBED ABOVE IN THE DIRECTION OF EGRESS.

ADA 4.13.10 - CLOSERS:
THE FINAL FORCE TO OPERATE DOORS CANNOT EXCEED 8.5 LBS. FOR EXTERIOR DOORS AND 5 LBS. FOR INTERIOR DOORS. REQ'D FIRE DOORS MAY REQUIRE UP TO 15 LBS. PRESSURE. THE PRESSURE IS TO BE MEASURED AT RIGHT ANGLES TO HINGED DOORS AND AT THE CENTER PLANE OF SLIDING DOORS. COMPENSATION DEVICES OR AUTOMATIC DOOR OPERATORS MAY BE UTILIZED TO MEET THE REQUIREMENTS.

ADA 4.14 - ENTRANCES:
ALL PRIMARY ENTRANCES TO BUILDINGS AND FACILITIES ARE REQUIRED TO BE MADE ACCESSIBLE. A PRIMARY ENTRANCE IS DEFINED AS "ANY ENTRANCE TO A FACILITY WHICH HAS A SUBSTANTIAL FLOW OF PEDESTRIANS TO ANY SPECIFIC MAJOR FUNCTION OF THE FACILITY". HANDICAPPED PROFILED DOORSTOPS ARE REQUIRED TO BE ANCHORED TO PREVENT INTERFERENCE WITH WHEELCHAIR TRAFFIC.

ADA 4.30 - ENTRANCE SIGNS:
ALL BUILDING ENTRANCES THAT ARE ACCESSIBLE TO AND USABLE BY PHYSICALLY HANDICAPPED PERSONS SHALL BE IDENTIFIED WITH AT LEAST ONE STANDARD SIGN AND WITH ADDITIONAL DIRECTIONAL SIGNS, AS REQUIRED. TO BE VISIBLE TO PERSONS ALONG APPROACHING PEDESTRIAN WAYS.

TO GET PLANS GO TO WWW.LDIREPRO.COM

FOOT LOCKER, INC.

STORE PLANNING DEPT.
112 WEST 34TH STREET
NEW YORK, NY 10120

ARCHITECTURAL CONSTRUCTION SERVICES
DAVID C. SANDERS / MANAGING ARCHITECT
www.4acsl.com
P 714.436.1000
F 714.436.1033
Corporate Office
1123 Arrowhead Street
Costa Mesa, CA 92626

REVISIONS		
NO.	DESCRIPTION	DATE
1	FULL CONTENTS	03/16/07

DATE:	03/12/07
SCALE:	AS SHOWN
GROSS AREA:	2,270 SQ. FT.
SALES AREA:	1,287 SQ. FT.
PROJECT # :	57284
DRAWN/CHECKED BY:	TP/BY

FOOTACTION USA

PROJECT TITLE
TYRONE SQUARE
SPACE 110
6901 Tyrone Square
St. Petersburg, FL 33710
STORE NO. 57284

SHEET TITLE
CONSTRUCTION PLAN

SHEET NO. A1.0

EXISTING WALL TO REMAIN. PATCH AND REPAIR AS REQ'D TO MAINTAIN EXISTING FIRE-RATING AND ANY NEW FINISHES.

A2 EXIST'G PARTITION

EXISTING FULL HEIGHT DEMISING WALL TO REMAIN. WALL MUST CONFORM TO 1-HOUR FIRE RATING (UL465) AND LOCAL CODES. PATCH AND REPAIR AS REQ'D TO MAINTAIN EXISTING FIRE-RATING AND ANY NEW FINISHES.

A1 DEMISING PARTITION

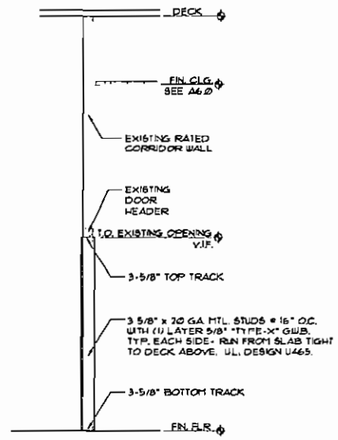

B 1 HOUR RATED INTERIOR PARTITION

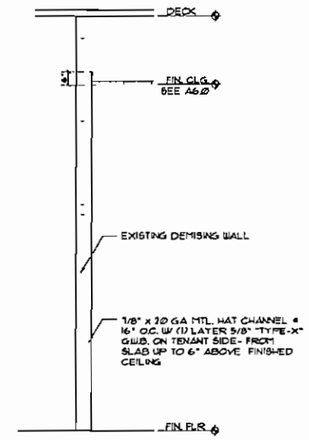

C PARTITION FURRING

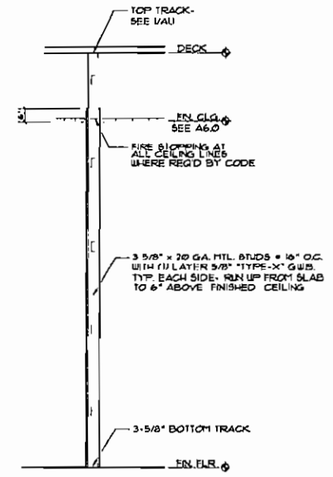

D INTERIOR PARTITION

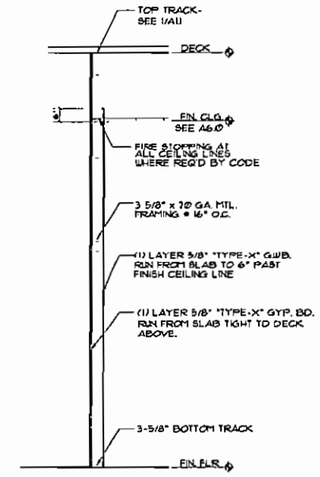

E INTERIOR PARTITION

PARTITION TYPE "A" | PARTITION TYPE "B" | PARTITION TYPE "C" | PARTITION TYPE "D" | PARTITION TYPE "E"

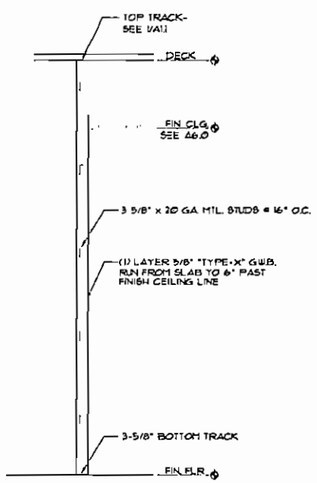

F INTERIOR PARTITION

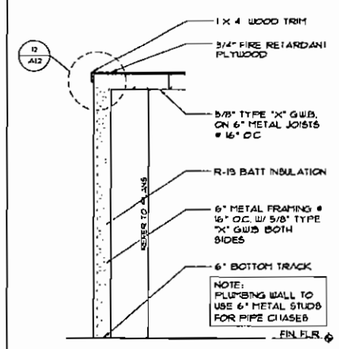

G INTERIOR PARTITION
PLUMBING WALL

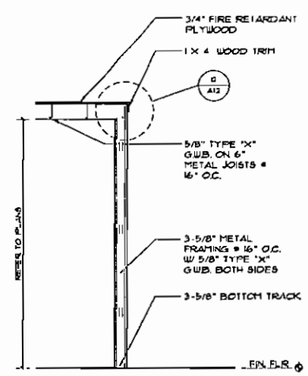

H INTERIOR PARTITION
PLATFORM

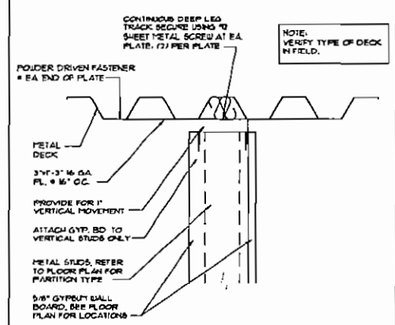

PARALLEL TO STRUCTURE

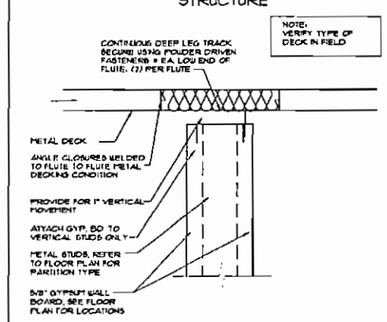

PERPENDICULAR TO STRUCTURE

PARTITION TYPE "F" | PARTITION TYPE "G" | PARTITION TYPE "H" | PARTITION TYPE "I"

1 PARTITION HD. TIGHT TO DECK SCALE: 1"=1'-0"

TO ORDER PLANS GO TO WWW.LDTREPRO.COM

FOOT LOCKER, INC.

STORE PLANNING DEPT.
112 WEST 34TH STREET
NEW YORK, NY 10120

ARCHITECTURAL CONSTRUCTION SERVICES
DAVID L. BOWDEN - MANAGING ARCHITECT
www.dacsl.com
P 714.435.1000
F 714.435.1035
Corporate Office
1122 Bristol Street
Costa Mesa, CA 92626

REVISIONS

NO.	DESCRIPTION	DATE

DATE:	03/12/07
SCALE:	AS SHOWN
GROSS AREA:	2,270 SQ. FT.
SALES AREA:	1,287 SQ. FT.
PROJECT # :	57284
DRAWN/CHECKED BY:	TP/BY

FOOTACTION USA

PROJECT TITLE
TYRONE SQUARE
SPACE 110
6901 Tyrone Square
St. Petersburg, FL 33710
STORE NO. 57284

SHEET TITLE
PARTITION TYPES

SHEET NO. A1.1

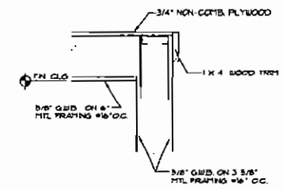

12 DECK DETAIL — SCALE: 1-1/2" = 1'-0"

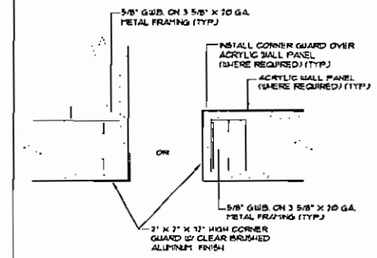

11 CORNER GUARD - NON-SALES — SCALE: 3" = 1'-0"

10C NOT USED

10B NOT USED

10A NOT USED

9 NOT USED

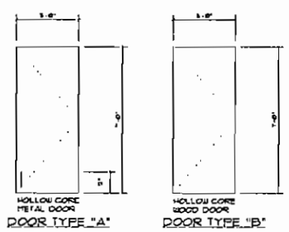

DOOR TYPE "A" DOOR TYPE "B"

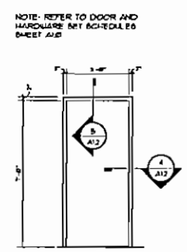

METAL DOOR FRAME

8 DOOR TYPES AND FRAMES — SCALE: 3/8" = 1'-0"

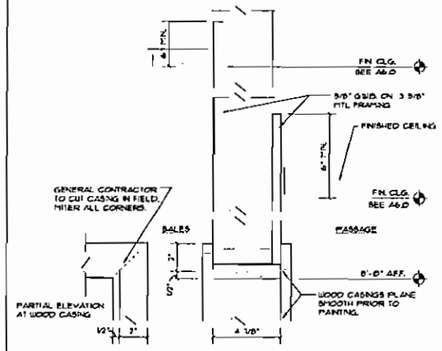

7 HEADER DETAIL — SCALE: 3" = 1'-0"

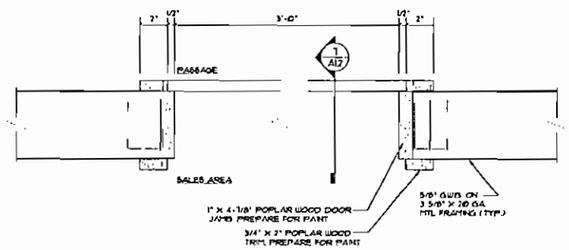

6 DETAIL AT CASED OPENING — SCALE: 3" = 1'-0"

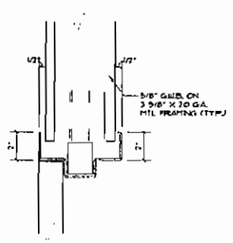

5 DOOR HEAD — SCALE: 3" = 1'-0"

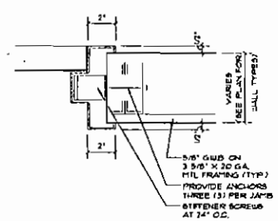

4 DOOR JAMB — SCALE: 3" = 1'-0"

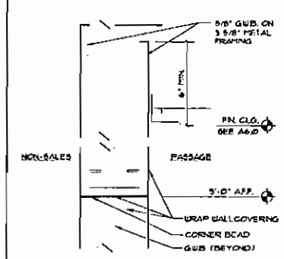

3 HEADER DETAIL — SCALE: 3" = 1'-0"

2 NOT USED

1 NOT USED

TO ORDER PLANS GO TO WWW.LDIREPRO.COM

FOOT LOCKER, INC.

STORE PLANNING DEPT.
112 WEST 34TH STREET
NEW YORK, NY 10120

ARCHITECTURAL CONSTRUCTION SERVICES
DAVID L. HOMBS - MANAGING ARCHITECT
www.4acsl.com
P 714.436.9000
F 714.436.9033
Corporate Office
1133 Bristol Street
Costa Mesa, CA 92626

REVISIONS

NO.	DESCRIPTION	DATE

DATE:	03/12/07
SCALE:	AS SHOWN
GROSS AREA:	2,270 SQ. FT.
SALES AREA:	1,287 SQ. FT.
PROJECT # :	57284
DRAWN/CHECKED BY:	TP/BY

FOOTACTION USA

PROJECT TITLE
TYRONE SQUARE
SPACE 110
6901 Tyrone Square
St. Petersburg, FL 33710

STORE NO. 57284

SHEET TITLE
CONSTRUCTION DETAILS

SHEET NO. A1.2

TOILETROOM ACCESSORIES SCHEDULE

1	GRAB BARS - BOBBRICK B-6806 SATIN FINISH WITH CONCEALED MOUNTINGS 1 1/2" DIAMETER (TEL: 818-362-3600)
2	TOILET TISSUE DISPENSER - BOBBRICK B-2840 SURFACE MOUNT WITH SHELF (TEL: 818-362-3600)
3	MIRRORS - BOBBRICK B-293-1830 STAINLESS STEEL TILT MIRROR 18" X 30" (TEL: 818-362-3600)
4	SOAP DISPENSERS - TO BE PROVIDED BY STORE OPERATIONS AT THE TIME OF STORE OPENING
5	SHELVES AND STANDARDS (2) 12" DEEP 4'-0" WIDE 1 1/2" SHELF - PLASTIC LAMINATE (6) SIDES ON MDF, @ 6'-0" AFF. ON (2) GARLY 64A STANDARDS WITH (4) GARLY 2" 686 BRACKETS

1. ALL TOILET ROOM ACCESSORIES FINISHES TO BE #4 STAINLESS UNLESS OTHERWISE IDENTIFIED.
2. ALL ACCESSIBLE TOILET ROOM ACCESSORIES MUST BE INSTALLED IN COMPLIANCE WITH ADA AND LOCAL CODES FOR MOUNTING HEIGHTS AND LOCATIONS. SEE NOTES THIS SHEET
3. TENANT G.C. TO INSTALL NON-COMBUSTIBLE BLOCKING AS REQUIRED FOR ALL ACCESSORIES

TOILETROOM GENERAL NOTES

TOILET ROOM

1. TOILET ROOM TO BE LOCATED IN LOGICAL LOCATION TO LANDLORD'S WATER AND SEWER LINES. PLANS AND PE CONDITIONS SHOWN MAY BE INACCURATE. TEN G.C. TO FIELD VERIFY LOCATION OF EXISTING CONDITIONS AND NOTIFY TENANT REP. IF CHANGES ARE NECESSARY. TEN G.C. TO VERIFY LOCATION AND ORIENTATION OF EXISTING TOILET ROOM(S) (IF ANY) AND UTILIZE EXISTING PLUMBING WALLS AND PLUMBING LINES TO MINIMIZE EXCESSIVE WORK AND NOTIFY TENANT REP. IF CHANGES ARE NECESSARY.
2. PROVIDE AND INSTALL A 60 X 30 FT. (TYP.) WATERPROOF MEMBRANE EXTENDED A MINIMUM OF 4" UP VERTICAL SURFACES IN TOILET ROOMS OR AS REQUIRED BY LANDLORD.
3. PROVIDE AND INSTALL A FLOOR DRAIN IF NOT EXISTING.
4. PROVIDE AND INSTALL MARLITE FIBERGLASS REINFORCED PANEL (FRP) WAINSCOAT TO 4'-0" AFF.
5. REFER TO SHEET A3.0 FOR FINISHES
6. SEAL FULL AROUND ALL EDGES @ ADJOINING MATLS WITH CLEAR SILICONE. FLOOD BASE TO WALLS MINIMUM TO WALLS BENCH TO WALLS, ETC.)

PLUMBING FIXTURES

REFERENCE MECHANICAL SHEET(S) FOR EXTENT OF PLUMBING WORK. ALL NEW PLUMBING FIXTURES UNLESS OTHERWISE SPECIFIED ON PLANS

ACCESSIBLE TOILET ROOM

DETAILS PROVIDED FOR FINISH REQUIREMENTS ONLY. IN THE EVENT AN ACCESSIBLE TOILET ROOM IS TO BE PROVIDED, REFERENCE "ADA TOILET ROOM REQUIREMENTS", BELOW

ADA 4.16 - WATER CLOSET:
THE HEIGHT IS REQUIRED TO BE A MINIMUM OF 17 INCHES AND A MAXIMUM OF 19 INCHES MEASURE TO THE TOP OF THE SEAT. FLUSH CONTROLS ARE TO BE OPERABLE BY AN OSCILLATING HANDLE WITH A MAXIMUM OPERATING FORCE OR 3 LBF OR BY A REMOTE LOW VOLTAGE BUTTON. THE HANDLE OR BUTTON IS TO BE LOCATED SO IT IS OPERABLE WITHOUT REQUIRING EXCESSIVE BODY MOVEMENT. HANDLE ON TOILET NOT TO EXCEED 44" AFF.

THE REQUIREMENTS FOR TOILET COMPARTMENTS DEPEND ON THE SIZE OF THE WATER CLOSET. 60 FT IS IMPORTANT TO KNOW WHAT TYPE ONE IS USING WHEN DESIGNING THE TOILET ROOM. WATER CLOSETS MUST BE A 1.6 GALLON FLUSH FIXTURE.

ADA 4.19 - LAVATORY:
PROVIDE A CLEARANCE OF AT LEAST 29 INCHES FROM THE FLOOR TO THE BOTTOM OF THE APRON WITH KNEE CLEARANCE UNDER THE FRONT LIP EXTENDING A MINIMUM OF 30 INCHES WIDE WITH 8 INCHES MINIMUM DEPTH AT THE TOP. PROVIDE TOE CLEARANCE AT LEAST 30 INCHES WIDE, 10 1/2 INCHES ABOVE THE FLOOR AND 11 INCHES DEEP FROM THE FRONT OF THE LAVATORY. - NO HEIGHT LIMITATIONS ARE SPECIFIED FROM THE TOP OF THE LAVATORY, BUT 34 INCHES IS RECOMMENDED BY THE FEDERAL ARCHITECTURAL AND TRANSPORTATION BARRIERS COMPLIANCE BOARD (ATBCB)

PROVIDE A CLEAR FLOOR SPACE 30 INCHES BY 48 INCHES IN FRONT OF THE LAVATORY. THE CLEAR SPACE MAY EXTEND INTO KNEE AND TOE SPACE UNDERNEATH LAVATORY.

INSULATE OR COVER HOT WATER AND DRAIN PIPES UNDER LAVATORIES.

FAUCET CONTROLS AND OPERATING MECHANISMS ARE REQUIRED TO BE OPERABLE WITH ONE HAND AND CAN NOT REQUIRE GRASPING, PINCHING OR TWISTING OF THE WRIST. THE FORCE REQUIRED TO ACTIVATE CONTROLS IS NOT TO EXCEED 5 LBF. LEVER-OPERATED, PUSH-TYPE, AND ELECTRONICALLY CONTROLLED MECHANISMS ARE EXAMPLES OF ACCEPTABLE DESIGNS. SELF-CLOSING VALVES ARE ALLOWED IF THE FAUCET REMAINS OPEN FOR AT LEAST 10 SECONDS.

ADA 4.26 - GRAB BARS:

LOCATE GRAB BARS ON EACH SIDE, OR ONE SIDE AND THE BACK OF THE WATER CLOSET. 33 INCHES ABOVE AND PARALLEL TO THE FLOOR. GRAB BARS AT THE SIDE ARE TO BE AT LEAST 42 INCHES LONG WITH THE FRONT END POSITIONED 24 INCHES IN FRONT OF THE WATER CLOSET. GRAB BARS AT THE BACK CAN NOT BE LESS THAN 36 INCHES LONG. THE DIAMETER OR WIDTH OF THE GRIPPING SURFACE IS REQUIRED TO BE 1 1/4 TO 1 1/2 INCHES, OR THE SHAPE IS TO PROVIDE AN EQUIVALENT GRIPPING SURFACE. IF GRAB BARS ARE MOUNTED ADJACENT TO A WALL, THE SPACE BETWEEN THE WALL AND THE GRAB BAR IS TO BE 1 1/2 INCHES.

GRAB BARS SHALL NOT ROTATE AND SHALL WITHSTAND 250 LBS(F) BENDING, SHEAR, AND TENSION.

GRAB BARS AND ANY SURFACE ADJACENT TO THEM CAN NOT HAVE ANY SHARP OR ABRASIVE ELEMENTS. EDGES ARE TO HAVE A MINIMUM OF 1/8 INCH

ADA 4.17 - ACCESSORIES:

EVERY SANITARY NAPKIN WASTE RECEPTACLES AND SIMILAR DISPENSING AND DISPOSAL FIXTURES ARE PROVIDED, AT LEAST ONE OF EACH TYPE IS TO BE LOCATED WITH ALL OPERABLE PARTS, INCLUDING COIN SLOTS, WITHIN 40 INCHES FROM THE FLOOR.

MOUNT MIRRORS WITH THE BOTTOM EDGE NO MORE THAN 40 INCHES FROM THE FLOOR.

ACCESS. TOILET ROOMS SHALL HAVE TOILET PAPER DISPENSERS TYP. AS SHOWN WL SHALL BE 7-9" AFF. DISPENSERS SHALL NOT PROJECT BEYOND THE FRONT OF THE WATER CLOSET. DISPENSERS THAT CONTROL DELIVERY OR DO NOT PERMIT CONTINUOUS FLOW SHALL NOT BE USED

ACCESS. TOILET ROOM STALLS SHALL HAVE TOE CLEARANCE AT THE FRONT PARTITION + AT LEAST ONE SIDE PARTITIONS OF 9" AFF. IF SUCH SPACE IS NOT PROVIDED, LENGTH + WIDTH OF STALL SHALL BE INCREASED BY 9" IN EACH DIRECTION ALL DOOR ARE TO SWING OUT

ADA 4.30 - SIGNS:

TOILET ROOM DOORS SHALL BE CLEARLY LABELED BY A UNIDEX SYMBOL, SECURELY FASTENED

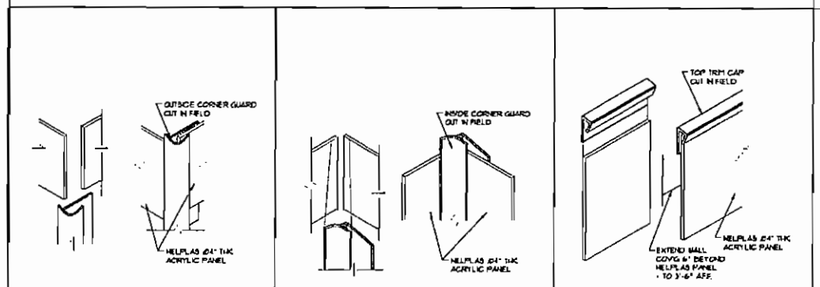

9C CORNER GUARD | 9D CORNER GUARD NOT TO SCALE | 9C TRIM CAP NOT TO SCALE

9 NELPLAS/KYDEX PANEL DETAILS

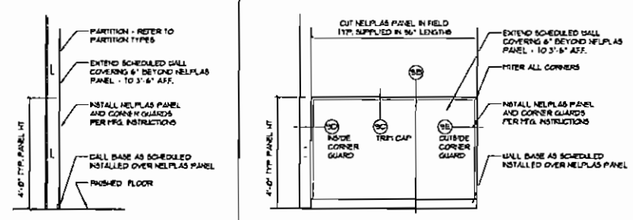

9B SECTION SCALE: 1/2"=1'-0" | 9A ELEVATION SCALE: 1/2"=1'-0"

SCALE: AS NOTED

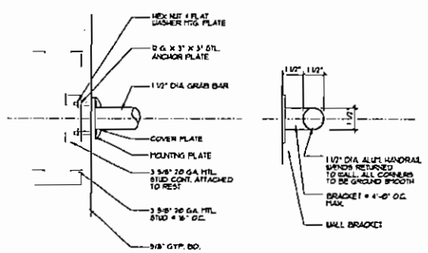

8 TOILETROOM GRAB BAR DETAILS SCALE: 3"=1'-0"

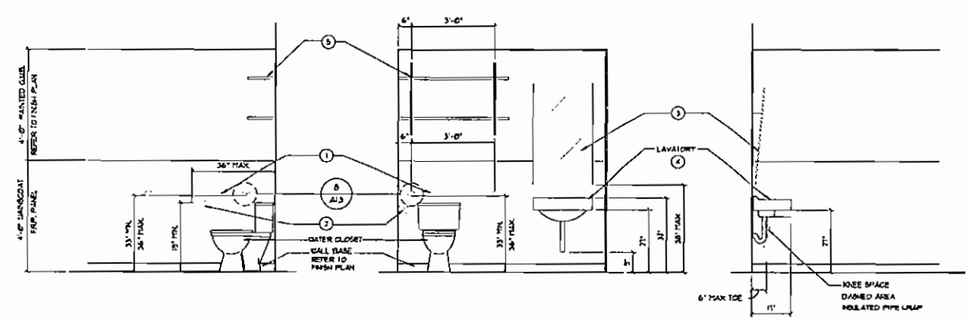

7 TOILET ROOM MOUNTING HEIGHTS SCALE: 1/2"=1'-0"

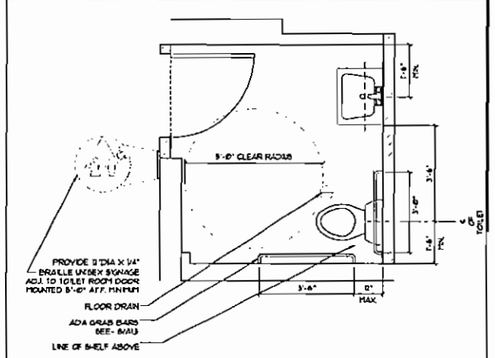

6 TOILET ROOM PLAN SCALE: 1/2"=1'-0"

4 NOT USED

5 NOT USED | 3 NOT USED | 2 NOT USED | 1 NOT USED

TO ORDER PLANS GO TO WWW.LDIREPRO.COM

FOOT LOCKER, INC.

STORE PLANNING DEPT.
112 WEST 34TH STREET
NEW YORK, NY 10120

ARCHITECTURAL CONSTRUCTION SERVICES
DAVID L. KOONCE - MANAGING ARCHITECT
www.4ccof.com
P 714.436.9000
F 714.436.9055
Corporate Office
1123 Bristol Street
Costa Mesa, CA 92626

REVISIONS

NO.	DESCRIPTION	DATE

DATE:	03/12/07
SCALE:	AS SHOWN
GROSS AREA:	2,270 SQ. FT.
SALES AREA:	1,287 SQ. FT.
PROJECT # :	57284
DRAWN/CHECKED BY:	TP/BY

FOOTACTION USA

PROJECT TITLE
TYRONE SQUARE
SPACE 110
6901 Tyrone Square
St. Petersburg, FL 33710

STORE NO. 57284

SHEET TITLE
CONSTRUCTION DETAILS

SHEET NO. A1.3

A. PROVIDE LATERAL SUPPORT WITH NO17 GA. WIRES SPLAYED IN 4 DIRECTIONS, 90 DEGREES APART. CONNECT AT MAIN RUNNER WITH 2-0" OF CROSSRUNNER AND TO STRUCTURE ABOVE AT ANGLE NOT TO EXCEED 45 DEGREES FROM PLANE OF CEILING. THESE LATERAL SUPPORTS TO BE 12'-0" O.C. WITH POINT 4'-0" FROM EACH WALL.

B. ALLOWANCE TO BE PROVIDED FOR LATERAL MOVEMENT OF SYSTEM MAIN AND CROSS RUNNERS MAY BE ATTACHED TO ADJACENT WALLS UNTI CLEARANCE BETWEEN WALL AND RUNNER AT REMAINING 3 WALLS. LIGHT FIXTURES RECESSED NOT OVER OVER 56 LBS. AND PENDENT NOT OVER 70 LBS MAY BE POSITIVELY ATTACHED TO CEILING SYSTEM RUNNERS WITH SCREWS OR BOLTS.

AIR DIFFUSERS NOT OVER 20 LBS. MAY BE POSITIVELY ATTACHED TO CEILING SYSTEM RUNNERS WITH SCREWS OR BOLTS.

AIR DIFFUSERS NOT OVER 30 LBS. RECEIVING NO EXTRA LOAD FROM DUCTWORK MAY BE POSITIVELY ATTACHED TO CEILING WITH SCREWS OR BOLTS.

C. LIGHTING FIXTURES: FURNISH AND INSTALL COMPLETE WITH LAMPS, BALLASTS AND REQUIRED MOUNTING HARDWARE. PRIOR TO ORDERING FIXTURES, VERIFY MOUNTING METHODS AND FINISHES. ALL FLOURESCENT FIXTURES MOUNTED IN "T" BAR CEILINGS TO BE INDEPENDENTLY SUSPENDED WITH 2 #12 STEEL WIRES DIAGONALLY. INSTALLATIONS IN FIRE-RATED AREAS TO BE DONE ACCORDING TO CODE REQUIREMENTS.

D. CONTRACTOR TO PROVIDE COMPRESSION STRUT AT 12'-0" O.C.

AT 36" O.C. THROUGHOUT STORE, USE 3 5/8" X 25 GA. WIRE AT 16" O.C. AT STOREFRONT UNLESS NOTED OTHERWISE. ALLOWABLE UNBRACED HEIGHT AS PER CHART BELOW.

METAL STUD SIZE	MAXIMUM UNBRACED HEIGHT
3 5/8" X 25 GA.	11'-3"
3 5/8" X 20 GA.	14'-0"
3 5/8" X 16 GA.	16'-0"
6" X 25 GA.	16'-0"
6" X 20 GA.	21'-0"
6" X 16 GA.	25'-0"

2. ALL CONNECTION AND FASTENERS TO BE AS PER DETAILS. ALL MANUFACTURERS AND I.C.B.O. # TO BE STRICTLY ADHERED TO BY G.C. UNLESS APPROVAL FOR EQUAL SUBSTITUTION IS RECEIVED FROM THE BUILDING DEPARTMENT.

3. ALL GYP. WALL BOARD TO BE 5/8" TYPE "X" THROUGHOUT. ATTACH w/ 1" TYPE S DRYWALL SCREWS 12" O.C. VERTICALLY AT STUDS AND 8" O.C. AROUND PERIMETER.

TABLE NO. 2
MAXIMUM SPACING OF THE BRACE

WALL HEIGHT	6'-0"	8'-0"	
UP TO 10'	12 GA WIRE	12 GA WIRE	
12'	10 GA WIRE	10 GA WIRE*	
14'	10 GA WIRE	25 GA STUD	
16'	10 GA WIRE	25 GA STUD	

* USE WITH 20 GA. HEAD RUNNER.

TABLE NO. 3
ALLOWABLE SPACING FOR 1" LONG FASTENERS, INCHES

PARTITION HEIGHT (FT.)	TRACK														
	NO. 16 GAUGE						NO. 20 GAUGE			NO. 22 GAUGE			NO. 24 GAUGE		NO. 26 GAUGE	
	LOAD NORMAL TO WALL SURFACE (psf)															
	5	10	15	5	10	15	5	10	15	5	10	15	5	10	5	10
6	42	42	42	42	42	42	42	42	33	42	33	24	42	23	15	
8	42	42	34	42	42	31	42	31	25	42	21	18	34	11	8	
10	42	41	27	42	38	25	42	30	20	42	22	14	27	13	9	
12	42	34	22	42	31	21	42	23	16	31	18	12	23	11	13	
14	42	29	19	42	27	18	42	21	14	31	15	10	19	8.5	6.5	
16	42	25	17	42	23	15	31	18	12	27	13	9	17	8.5	5.5	

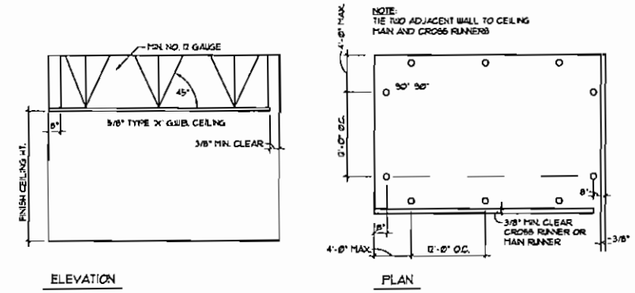

8 SUSPENSION PLAN AND ELEVATION — SCALE: N.T.S.

ELECTRICAL METALLIC TUBING (EMT) ONLY*	
SIZE (DIAMETER)	L (MAX. HEIGHT)
1/2"	4'-0"
3/4"	5'-2"
1"	6'-6"
1 1/4"	8'-6"
1 1/2"	9'-10"
2"	12'-0"

* NOTE: STRUTS OTHER THAN EMT, MAY REQUIRE ENGINEERING CALCULATIONS.

HANGERS: HANGERS FOR SUSPENDED CEILINGS SHALL BE NOT LESS THAN THE SIZES SET FORTH IN TABLE NO. 47-A, FASTENED TO OR EMBEDDED IN THE STRUCTURAL FRAMING, MASONRY, OR CONCRETE. HANGERS SHALL BE SADDLE TIED AROUND MAIN RUNNERS TO DEVELOP THE FULL STRENGTH OF THE HANGERS. LOWER END OF FLAT HANGERS SHALL BE BOLTED WITH 3/8" BOLTS TO RUNNER CHANNELS OR BENT TIGHTLY AROUND RUNNERS AND BOLTED TO THE MAIN PART OF THE HANGER

NOTE:
ALL 2' x 2' CEILING LIGHT FIXTURES AND 2' x 2' HVAC AIR REGISTERS SHALL BE SUPPORTED BY A MINIMUM OF TWO (2) HANGERS AT OPPOSITE CORNERS. CEILING SYSTEM SHALL NOT SUPPORT OTHER ITEMS.

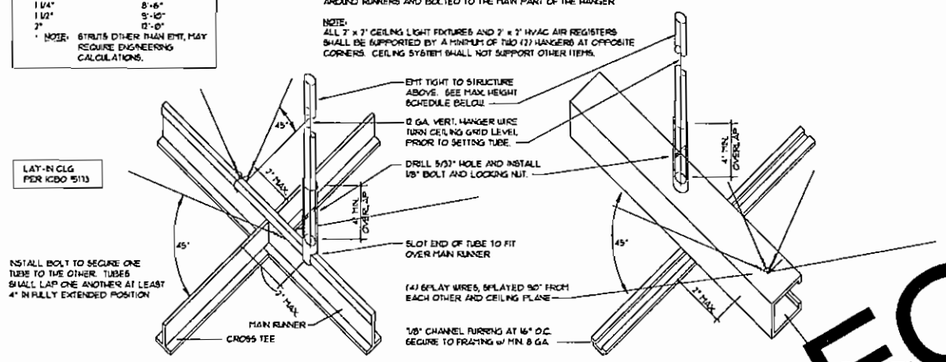

LAY-IN CEILING NOTE:
PROVIDE 3" LONG HORIZONTAL LEG # PERIMETER WALLS FOR SUSPENDED CEILING AND 3/4" GAP AT END TILES

NOTE:
CEILING CONSTRUCTION AND SUPPORT SUPPLIED AND INSTALLED BY LANDLORD. G.C. TO MAKE MODIFICATIONS AS REQUIRED FOR NEW PARTITIONS

NOTE:
COMPRESSION STRUT REQUIRED AT EACH SEISMIC RESTRAINT AT 12'-0" O.C. EACH WAY, OR EVERY 144 SF. OF CEILING AREA PER U.B.C. STANDARDS 47-18. ICBO NO. ER-2744

7 SUSPENSION DETAILS — SCALE: N.T.S.

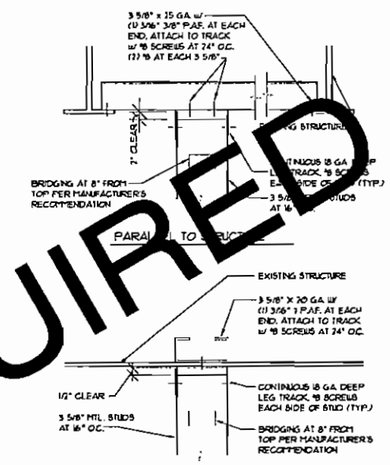

6 CONNECTION DETAIL — SCALE: 3" = 1'-0"

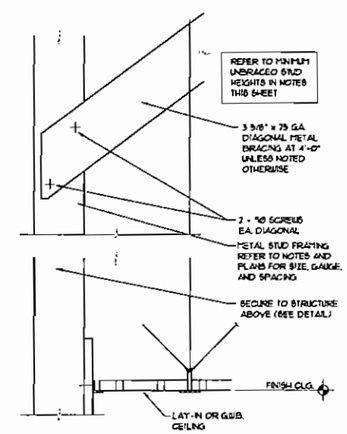

5 BRACING DETAIL — SCALE: 3" = 1'-0"

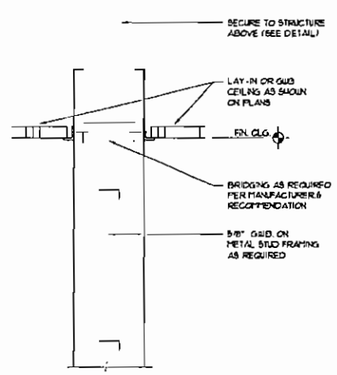

4 CONNECTION DETAIL — SCALE: 3" = 1'-0"

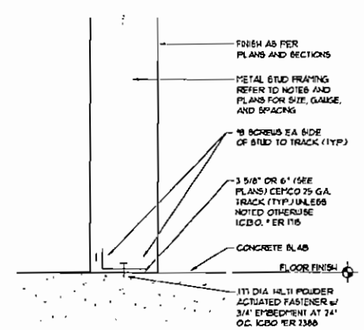

3 FLOOR TRACK DETAIL — SCALE: 3" = 1'-0"

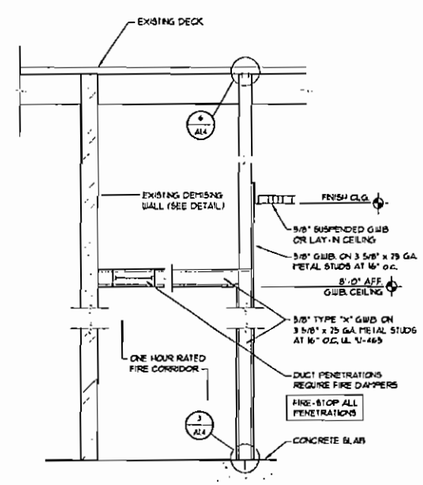

2 SECTION @ 1 HR RATED CORRIDOR — SCALE: 3" = 1'-0"

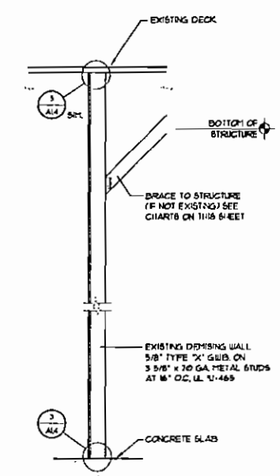

1 DEMISING WALL SECTION — SCALE: 3" = 1'-0"

AS REQUIRED
TO ORDER PLANS GO TO WWW.EDIREPRO.COM

FOOT LOCKER, INC.

STORE PLANNING DEPT.
112 WEST 34TH STREET
NEW YORK, NY 10120

ARCHITECTURAL CONSTRUCTION SERVICES
DAVID L. ARMOR - MANAGING ARCHITECT
www.dcsai.com
P 714.436.9000
F 714.436.9035
Corporate Office
1122 Bristol Street
Costa Mesa, CA 92626

REVISIONS

NO.	DESCRIPTION	DATE

DATE:	03/12/07
SCALE:	AS SHOWN
GROSS AREA:	2,270 SQ. FT.
SALES AREA:	1,287 SQ. FT.
PROJECT # :	57284
DRAWN/CHECKED BY:	XX/XX

FOOTACTION USA

PROJECT TITLE
TYRONE SQUARE
SPACE 110
6901 Tyrone Square
St. Petersburg, FL 33710

STORE NO. 57284

SHEET TITLE
SEISMIC DETAILS

SHEET NO. A1.4

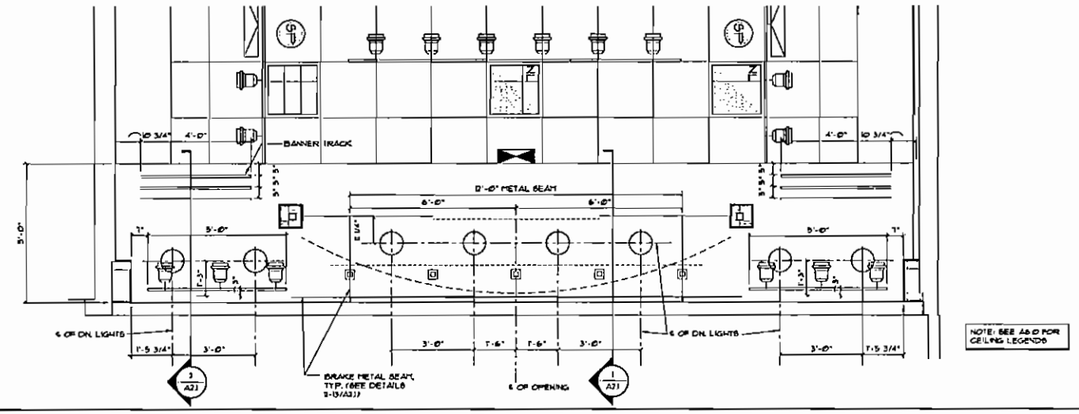

3 STOREFRONT CEILING PLAN

SCALE: 1/2" = 1'-0"

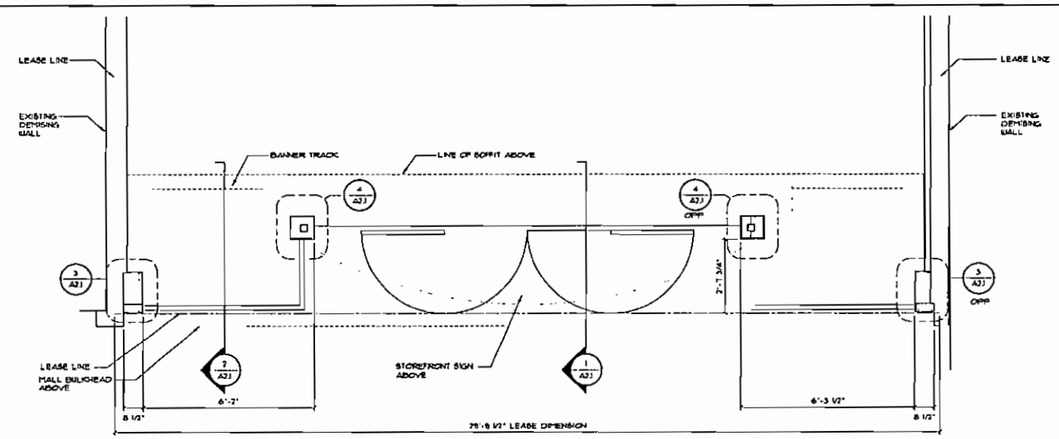

2 STOREFRONT PLAN

SCALE: 1/2" = 1'-0"

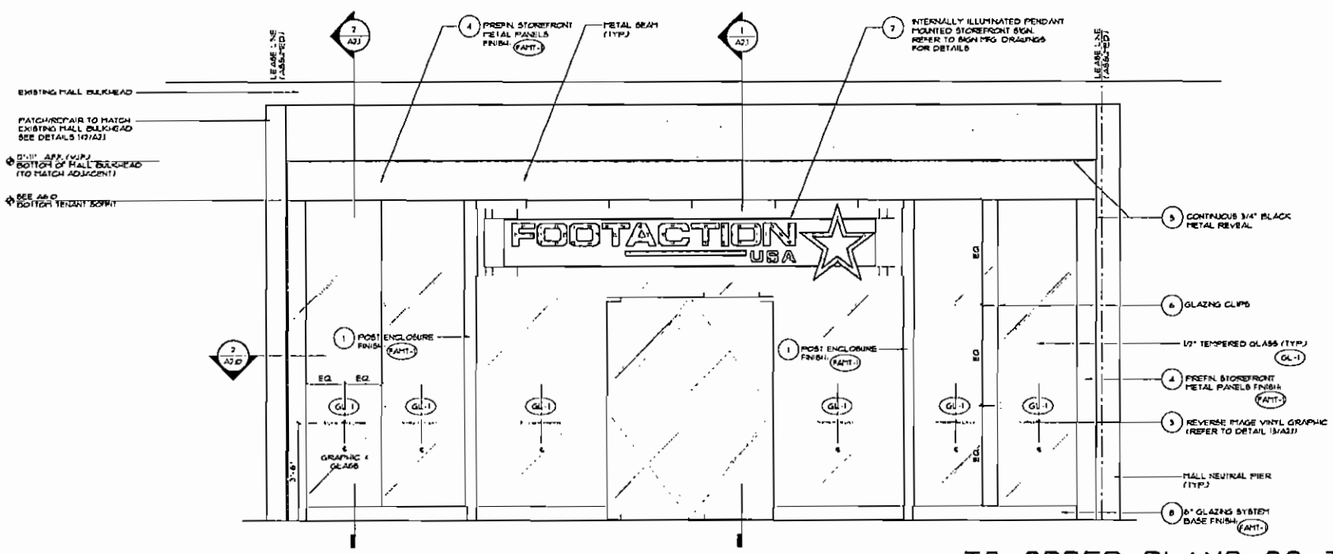

1 STOREFRONT ELEVATION

SCALE: 1/2" = 1'-0"

STOREFRONT / SIGNAGE NOTES:

1. TENANT G.C. TO PURCHASE PREFABRICATED STOREFRONT METAL PANEL SYSTEM FROM TENANT'S APPROVED STOREFRONT SYSTEM VENDOR. - VERIFY PANEL SIZE REQUIREMENTS IN FIELD PRIOR TO CONSTRUCTION AND SUPPLY FIELD DIMENSIONS TO APT. INC. AND PROJECT CONSTRUCTION MANAGER A MINIMUM OF (3) WEEKS PRIOR TO PANELS ON-SITE ARRIVAL. - PROVIDE SUBTRATES AS DETAILED AND INSTALL PANELS PER MFG. INSTRUCTIONS.

   STOREFRONT TO BE APPROVED BY LANDLORD PRIOR TO CONSTRUCTION.

2. SIGNAGE MANUFACTURER TO SUPPLY AND INSTALL ILLUMINATED SIGN WITH PAINTED 1/2" THK COLD ROLLED ARCHED PLATE

   TENANT G.C. TO INSTALL (3) 3"X3" STEEL TUBES 24"X4" MOUNTING PLATE PROVIDED BY TENANT'S SIGNAGE MFG.

   REFER TO SIGN MFG. DRAWINGS FOR DETAILS

3. SIGNAGE MANUFACTURER TO SUPPLY REVERSE IMAGE VINYL GRAPHIC TO INSIDE OF STOREFRONT GLAZING - INSTALL WHERE INDICATED ON PLANS - SEE SIGN MFG DRAWINGS FOR DETAILS.

4. SUPPLY AND INSTALL BRAKE METAL WHERE INDICATED ON PLANS. ALL BRAKE METAL TO BE 16 GA. FIN. PAINT TO BE (FA/T1-11) NO EXPOSED FASTENERS ARE ALLOWED. SEAL BOTTOM EDGES W/ SILICAN SILICONE. TOP EDGES TO BE INSTALLED SITHGHT EDGE TO CEILING. NO CUT EDGES

   SUBMIT SHOP DRAWINGS AND METAL SAMPLES TO TENANT PROJECT MANAGER FOR APPROVAL PRIOR TO FABRICATION.

   ALL BRAKE METAL HORIZONTALS AND VERTICALS ARE TO BE SEAMLESS TO 11' IF 11' GOODS ARE NOT AVAILABLE, GC IS TO CONTACT FOOT LOCKER CONSTRUCTION PROJECT MANAGER PRIOR TO PROJECT START.

5. SUPPLY AND INSTALL 3/4" X 3/4" THK 16 GA. METAL REVEAL BLACK FINISH WHERE INDICATED ON PLANS WITH NO VISIBLE FASTENERS (SET IN PLASTIC)

6. SUPPLY AND INSTALL GLAZING CLIPS "SIGSTA" BY STYLMARK INC.

7. INSTALL GLAZING FRAMING SYSTEM INCLUDING BASE AND HEAD - INSTALL PER MFG. INSTRUCTIONS.

   SUPPLY AND INSTALL NON-COMBUSTIBLE BLOCKING AS REQ'D.

8. REFER TO FINISH SCHEDULE SHEET A3.0 FOR COMPLETE STOREFRONT FINISHES.

TO ORDER PLANS GO TO WWW.LDIREPRO.COM

FOOT LOCKER, INC.

STORE PLANNING DEPT.
112 WEST 34TH STREET
NEW YORK, NY 10120

ARCHITECTURAL CONSTRUCTION SERVICES
DAVID L. SHOREY • KATHERINE HERNITSKY
www.4ascs1.com
P 714.436.9000
F 714.436.9095
Corporate Office
1322 Bristol Street
Costa Mesa, CA 92626

REVISIONS

NO.	DESCRIPTION	DATE

DATE:	03/12/07
SCALE:	AS SHOWN
GROSS AREA:	2,270 SQ. FT.
SALES AREA:	1,287 SQ. FT.
PROJECT # :	57284
DRAWN/CHECKED BY:	DE/BY

FOOTACTION USA

PROJECT TITLE
TYRONE SQUARE
SPACE 110
6901 Tyrone Square
St. Petersburg, FL 33710

STORE NO. 57284

SHEET TITLE
STOREFRONT PLANS & ELEVATION

SHEET NO. A2.0

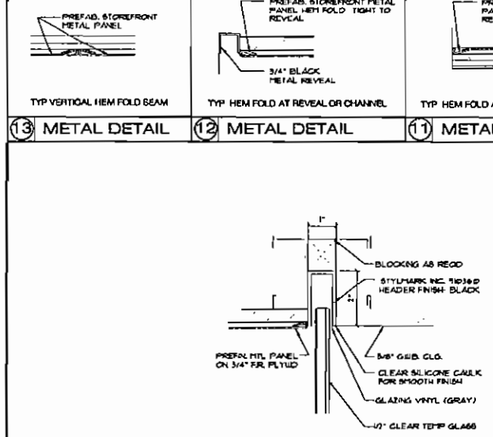

13 METAL DETAIL | 12 METAL DETAIL | 11 METAL DETAIL | SCALE: 6" = 1'-0"

10 NOT USED

9 NOT USED

8 GLAZING HEAD DETAIL | SCALE: 6" = 1'-0"

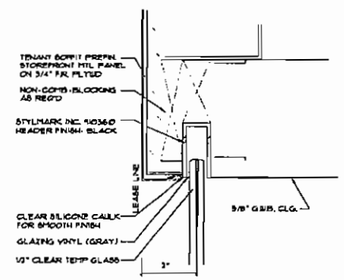

7 GLAZING HEAD DETAIL | SCALE: 6" = 1'-0"

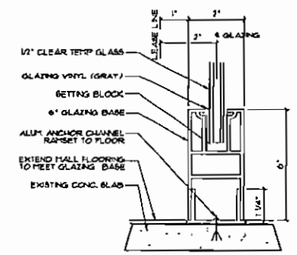

6 GLAZING BASE DETAIL | SCALE: 6"=1'-0"

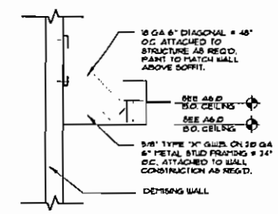

5 SOFFIT DETAIL | SCALE: 3/4" = 1'-0"

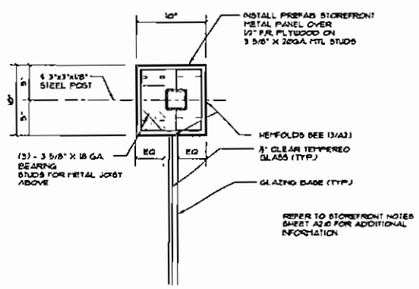

4 PLAN DETAIL | SCALE: 1 1/2" = 1'-0"

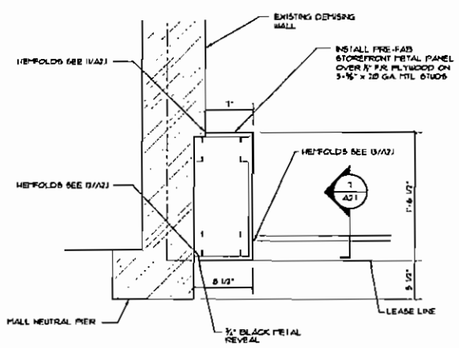

3 PLAN DETAIL | SCALE: 1 1/2" = 1'-0"

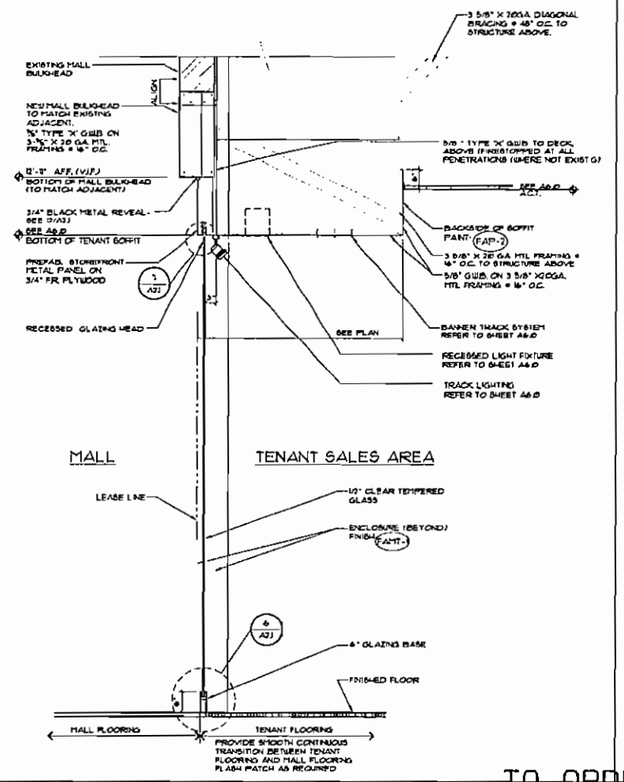

2 SECTION AT GLAZING | SCALE: 3/4" = 1'-0"

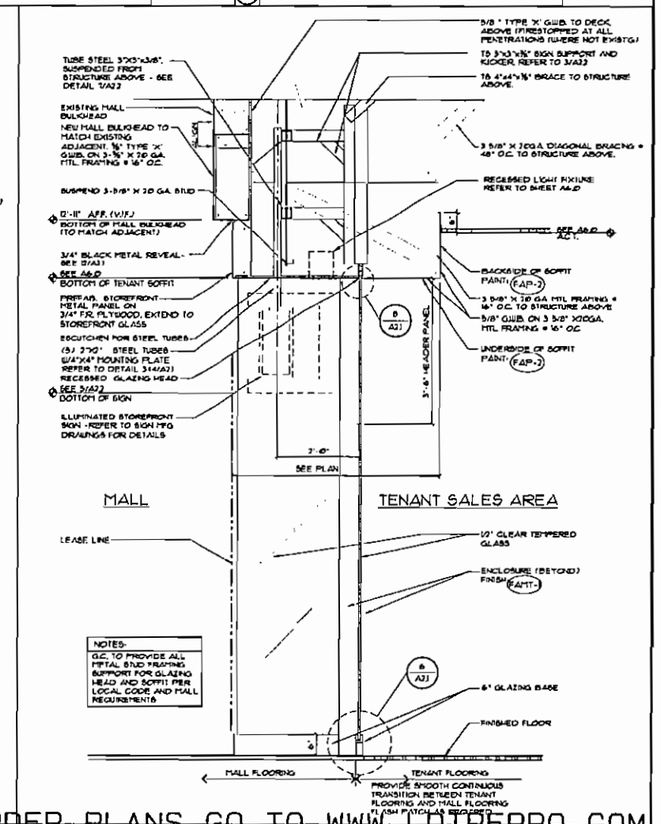

NOTES-
G.C. TO PROVIDE ALL METAL STUD FRAMING SUPPORT FOR GLAZING HEAD AND SOFFIT PER LOCAL CODE AND MALL REQUIREMENTS

1 SECTION AT ENTRANCE | SCALE: 3/4" = 1'-0"

TO ORDER PLANS GO TO WWW.LDIREPRO.COM

FOOT LOCKER, INC.

STORE PLANNING DEPT.
112 WEST 34TH STREET
NEW YORK, NY 10120

ARCHITECTURAL CONSTRUCTION SERVICES
DAVID L. SNOOK - MANAGING ARCHITECT
www.dacsl.com
P 714.436.9000
F 714.436.9035
Corporate Office
1122 Bristol Street
Costa Mesa, CA 92626

REVISIONS

NO.	DESCRIPTION	DATE

DATE:	03/12/07
SCALE:	AS SHOWN
GROSS AREA:	2,270 SQ. FT.
SALES AREA:	1,287 SQ. FT.
PROJECT # :	57284
DRAWN/CHECKED BY:	DE/BY

FOOTACTION USA

PROJECT TITLE
TYRONE SQUARE
SPACE 110
6901 Tyrone Square
St. Petersburg, FL 33710

STORE NO. 57284

SHEET TITLE
STOREFRONT DETAILS

SHEET NO. A2.1

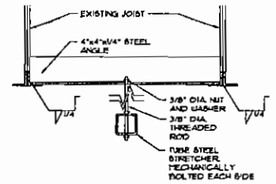

10 SUSPENSION DETAIL

SCALE: 1 1/2" = 1'-0"

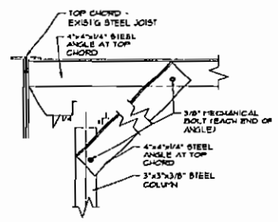

9 ANGLE BRACING DETAIL

SCALE: 1 1/2" = 1'-0"

VINYL GRAPHIC INSTALLATION NOTES

TENANT SIGN CONTRACTOR TO SUPPLY AND INSTALL DIGITAL CRYSTAL REVERSE IMAGE GRAPHIC ON TENANT SIDE OF GLASS WHERE INDICATED ON STOREFRONT ELEVATION.

SIGN CONTRACTOR TO SUBMIT (2) SETS OF SIGN DESIGN AND SHOP DRAWINGS FOR APPROVAL BY TENANT.

SIGN CONTRACTOR TO SUBMIT (4) SETS OF SIGN SHOP DRAWINGS TO LANDLORD, BUT ONLY AFTER APPROVAL BY TENANT.

SIGN CONTRACTOR SHALL OBTAIN A SIGN PERMIT FROM THE LOCAL GOVERNING AUTHORITY PRIOR TO INSTALLATION. SIGN CONTRACTOR MUST HAVE INSURANCE ON FILE WITH MALL TENANT COORDINATOR AT TIME OF CHECK-IN.

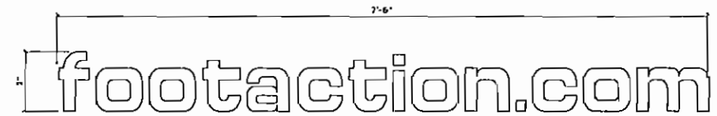

3 VINYL GRAPHIC INSTALLATION NOTES

SCALE: N.T.S.

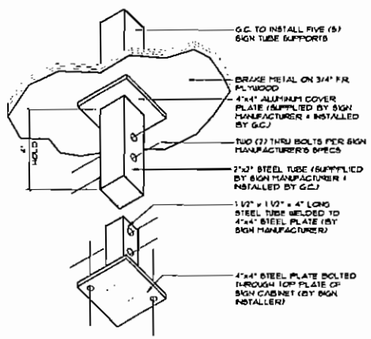

7 SIGN MOUNT DETAILS

SCALE: 1/2" = 1'-0"

6 NOT USED

MIRROR SIGN NOTES

TENANT SIGN CONTRACTOR TO SUPPLY AND INSTALL A WALL MOUNTED INTERNALLY ILLUMINATED BOX SIGN WITH 1/2" THICK CLEAR PLEXIGLAS PUSHED-THROUGH LETTER INSERTS WITH POLISHED EDGES AND TRANSLUCENT WHITE PLEXIGLAS BACK-UP ALONG WITH A 2-1/2" DEEP X .063 GAUGE ALUMINUM REVERSE CHANNEL STAR.

SIGN CONTRACTOR TO CHECK ELECTRICAL CIRCUIT PROVIDED FOR EACH TENANT SIGN.

SIGN CONTRACTOR TO SUBMIT (2) SETS OF SIGN DESIGN AND SHOP DRAWINGS FOR APPROVAL BY TENANT.

SIGN CONTRACTOR TO SUBMIT (4) SETS OF SIGN SHOP DRAWINGS TO LANDLORD, BUT ONLY AFTER APPROVAL BY TENANT.

SIGN CONTRACTOR SHALL OBTAIN A SIGN PERMIT FROM THE LOCAL GOVERNING AUTHORITY PRIOR TO INSTALLATION. SIGN CONTRACTOR MUST HAVE INSURANCE ON FILE WITH MALL TENANT COORDINATOR AT TIME OF CHECK-IN.

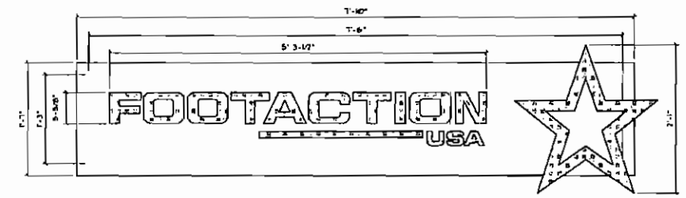

2 BACKWRAP SIGN INSTALLATION NOTES

SCALE: N.T.S.

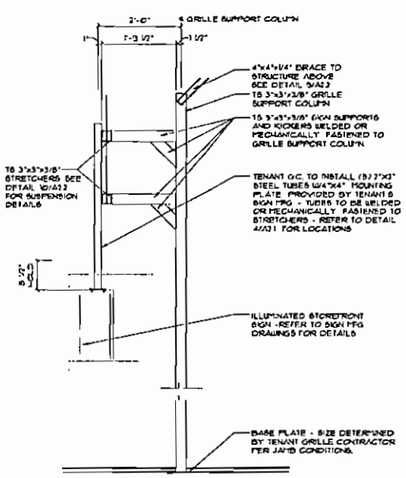

5 SECTION @ FRAMING

SCALE: 3/4" = 1'-0"

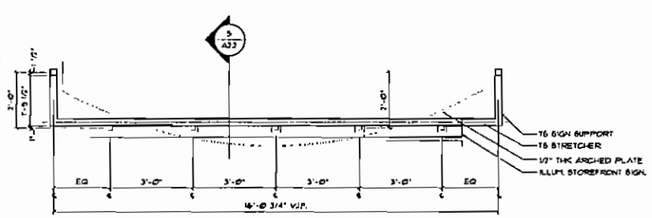

4 PLAN DETAIL @ FRAMING

SCALE: 1/2" = 1'-0"

STOREFRONT SIGN NOTES

TENANT SIGN CONTRACTOR TO SUPPLY AND INSTALL A PENDANT MOUNTED INTERNALLY ILLUMINATED BOX SIGN WITH 1/2" THICK CLEAR PLEXIGLAS PUSHED-THROUGH LETTER INSERTS WITH POLISHED EDGES AND TRANSLUCENT WHITE PLEXIGLAS BACK-UP ALONG WITH A 2-1/2" DEEP X .063 GAUGE ALUMINUM REVERSE CHANNEL STAR.

SIGN CONTRACTOR TO CHECK ELECTRICAL CIRCUIT PROVIDED FOR EACH TENANT SIGN.

SIGN CONTRACTOR TO SUBMIT (2) SETS OF SIGN DESIGN AND SHOP DRAWINGS FOR APPROVAL BY TENANT.

SIGN CONTRACTOR TO SUBMIT (4) SETS OF SIGN SHOP DRAWINGS TO LANDLORD, BUT ONLY AFTER APPROVAL BY TENANT.

SIGN CONTRACTOR SHALL OBTAIN A SIGN PERMIT FROM THE LOCAL GOVERNING AUTHORITY PRIOR TO INSTALLATION. SIGN CONTRACTOR MUST HAVE INSURANCE ON FILE WITH MALL TENANT COORDINATOR AT TIME OF CHECK-IN

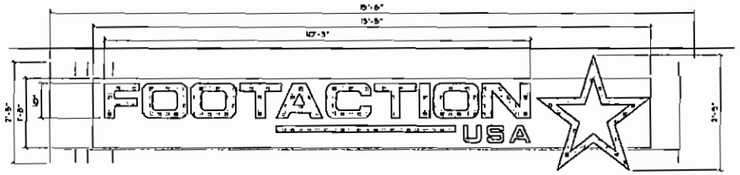

1 STOREFRONT SIGN INSTALLATION NOTES

SCALE: N.T.S.

TO ORDER PLANS GO TO WWW.LDIREPRO.COM

FOOT LOCKER, INC.

STORE PLANNING DEPT.
112 WEST 34TH STREET
NEW YORK, NY 10120

ARCHITECTURAL CONSTRUCTION SERVICES
DAVID L. RHODES - MANAGING ARCHITECT
www.4acsi.com
P 714.436.9000
F 714.436.9035
Corporate Office
3132 Pelstad Street
Costa Mesa, CA 92626

REVISIONS

NO.	DESCRIPTION	DATE

DATE:	03/12/07
SCALE:	AS SHOWN
GROSS AREA:	2,270 SQ. FT.
SALES AREA:	1,287 SQ. FT.
PROJECT # :	57284
DRAWN/CHECKED BY:	DE/BY

FOOTACTION USA

PROJECT TITLE
TYRONE SQUARE
SPACE 110
6901 Tyrone Square
St. Petersburg, FL 33710

STORE NO. 57284

SHEET TITLE
STOREFRONT & SIGN DETAILS

SHEET NO. A2.2

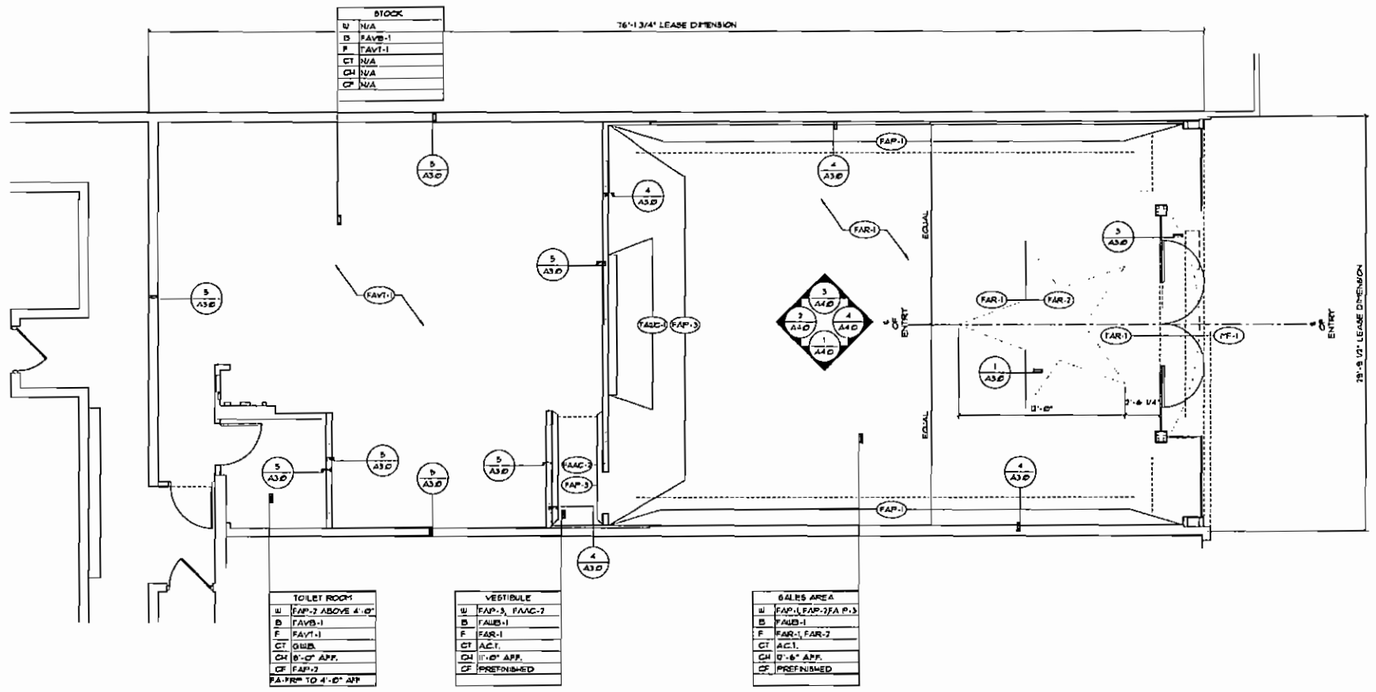

FINISH PLAN

SCALE: 1/4" = 1'-0"

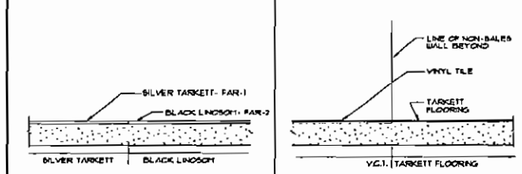

1 TARKETT TO TARKETT SCALE: 3" = 1'-0"

2 VCT TO TARKETT SCALE: 3" = 1'-0"

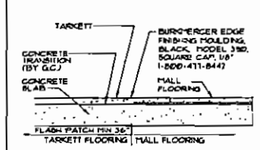

3 TILE TO TARKETT SCALE: 3" = 1'-0"

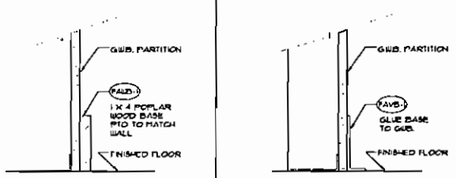

4 WOOD BASE DETAIL SCALE: 3" = 1'-0"

5 VINYL BASE DETAIL SCALE: 3" = 1'-0"

FINISH NOTES

1. ALL PARTITIONS AND SURFACES TO BE PAINTED UNLESS OTHERWISE NOTED.
2. ALL DOORS AND FRAMES TO BE PAINTED ARE TO MATCH COLOR OF WALL TO ROOM UNLESS OTHERWISE NOTED. DOOR FROM PASSAGE TO NON-SALES PAINT AS INDICATED ON DOOR SCHEDULE
3. ALL FINISHES TO BE APPROVED BY OWNER PRIOR TO INSTALLATION.
4. ALL TRANSITIONS BETWEEN DISSIMILAR FLOOR FINISHES SHALL BE SMOOTH AND FLUSH.
5. PROVIDE A WATERPROOF MEMBRANE AT TOILET ROOM UNDER SPECIFIED TILE FLOORING THE MEMBRANE SHOULD CONTINUE UP WALLS A MINIMUM OF 4" AND MUST BE ROLL-OUT TYPE (NOBLESEAL OR EQUAL)
6. PROVIDE A RAISED HANDICAP ACCESSIBLE THRESHOLD AT TOILET ROOM DOOR FOR WATER RETAINAGE.
7. PAINT TRIM FOR FITTING ROOM & PASSAGE (FAP-1).

FINISH KEY

ROOM NAME - 100
W WALL FINISH
B WALL BASE
F FLOOR FINISH
CT CEILING TYPE
CH CEILING HEIGHT
CF CEILING FINISH
MISC NOTES

SUB-FLOOR PREPARATION

REQUIRED MOISTURE TESTS MUST BE PERFORMED ON ALL CONCRETE SUB-FLOORS REGARDLESS OF GRADE LEVEL OR WHETHER OR NOT THE CONCRETE IS FRESHLY POURED OR IS CLASSIFIED AS AN OLDER SLAB. MOISTURE TESTING SHOULD BE PERFORMED BY ASTM F 1869 CALCIUM CHLORIDE TEST WITH MOISTURE LEVELS NOT TO EXCEED FIVE (5) POUNDS PER TWENTY-FOUR (24) HOURS PER ONE THOUSAND (1000) SQUARE FEET OR ASTM F 2170 IN SITE RELATIVE HUMIDITY TEST WITH READINGS WITH MOISTURE LEVELS WHEN MEASURED BY THIS METHOD, NOT EXCEED SEVENTY FIVE (75) PERCENT.

A WRITTEN MOISTURE TEST REPORT IS TO BE SUBMITTED TO THE FOOT LOCKER PROJECT MANAGER WITHIN (5) DAYS THE TEST IS ADMINISTERED.

FOOTACTION FINISH SCHEDULE

SEE ELEVATIONS (5/A531 & 6/A531) FOR SALES AREA FINISHES

CALLOUT	MANUFACTURER	DESCRIPTION	COMMENTS	FURNISHED BY	INSTALLED BY
PAINT					
(PAINT-1)	BENJAMIN MOORE	BLACK #731-10 PEARL FINISH	SALES AREA	TENANT G.C.	TENANT G.C.
(PAINT-2)	BENJAMIN MOORE	DECORATORS WHITE PEARL FINISH	SALES AREA, SEE SHEET A3.0 & A6.0	TENANT G.C.	TENANT G.C.
(PAINT-3)	DEVOE	BLUE #1750-0250 DEVOE - PREMIUM PLUS INT EGGSHELL FINISH - CUSTOM COLOR MATCH - DEEP BASE (3300X) COLORANT OZ AB ZN: E THALO BLUE 2 7 1; KX WHITE 0 43 0; R EXTERIOR RR 0 1 0; T RED INT YELL 0 1 1	REFER TO PLAN	TENANT G.C.	TENANT G.C.
GLASS					
(GL-1)		TEMPERED GLASS, BUTT-JOINED WITH 1/8" GAPS	APPLIED "FOOTACTION" VINYL LOGO	TENANT G.C.	TENANT G.C.
WALL FINISH					
(FAC)	TOTAL PLASTICS, INC.	HELIX AS "FOOTACTION BLACK" - 2'-0" x 4'-0" x 3/8" RYDER WALL PANELS CONTACT: JIM THOMSON (800) 381-4439	PASSAGE AREAS (SEE DOOR SCHEDULE) SEE DETAIL 5/A6.0	TENANT G.C.	TENANT G.C.
(FAC)	TOTAL PLASTICS, INC.	HELIX AS "FOOTACTION BLUE" - 2'-0" x 4'-0" x 3/8" RYDER WALL PANELS CONTACT: JIM THOMSON (800) 381-4439	PASSAGE AREAS (SEE DOOR SCHEDULE) SEE DETAIL 5/A6.0	TENANT G.C.	TENANT G.C.
(FAP-1)	PLASTITE	LIGHT GRAY - FIBERGLASS REINFORCED PANEL (FRP-P151)	CLASS A RATED	TENANT G.C.	TENANT G.C.
(FAP-2)	ARMSTRONG PRODUCTS, INC.	PRIVATE TRIAL - 2x2 "COMPOSITE" GEORGIA SCALE (BL-325-2444) CUSTOM COLOR - "FOOT LOCKER" BLUE (PRIVATE COLOR) (F1504)	REFER TO NOTES SHEET A2.0	TENANT G.C. THRU AP	TENANT G.C.
(FAP-3)	GOLF GORDON	WALL COVERING VINYL 54" WIDE (S-3801150 PAPYRUS TEXTURE)	REFER TO PLANS AND ELEVATIONS	TENANT	TENANT G.C.
FLOORING					
(FAVT-1)	TARKETT	300m x 300m TILE - SILVER TA2611-10	SEE SHEET G1.1 FOR INSTALLATION REQUIREMENTS	TENANT	TENANT G.C.
(FAR-1)	TARKETT	BLACK LINOSOFT 10 TOOLLINE 3630081	SEE SHEET G1.1 FOR INSTALLATION INSTRUCTIONS	TENANT	TENANT G.C.
(FAT-1)	ARMSTRONG	VINYL COMPOSITION TILE IMPERIAL TEXTURE STANDARD EXCELON BLACK STERLING 12" X 12" X 1/8"	NON-SALES ONLY	TENANT G.C.	TENANT G.C.
(FAB-1)	JOHNSONITE	4" VINYL WALL BASE V8174 142-BLACK		TENANT G.C.	TENANT G.C.
(FAB)		1 X 4 POPLAR WOOD BASE PAINTED (FAP-1)	MITER ALL CORNERS	TENANT G.C.	TENANT G.C.
(FAT-1)	GRANITI FIANDRE	PIETRA DI VARESE - 12"X12"X3/8" W 8" X 8" CONTACT: KEN OBERT 866-464-0890	GROUT: 1938 WINTER GRAY	TENANT	TENANT G.C.
(FAT-1)	GRANITI FIANDRE	LAVAGNA - 3" x 3" CONTACT: KEN OBERT 866-464-0890	GROUT: 1938 CHARCOAL (TO BE USED AT ALL BRICK PATTERN) COORDINATE W/ ALL REP FOR AVAILABILITY INSTALL 1/2 GLOSSIER LINE	TENANT	TENANT G.C.
(FF-1)	PER LANDLORD CRITERIA	MATCH MALL FLOORING IN COLOR, TEXTURE AND PATTERN		TENANT G.C.	TENANT G.C.

TO ORDER PLANS GO TO WWW.LDIREPRO.COM

FOOT LOCKER, INC.

STORE PLANNING DEPT.
112 WEST 34TH STREET
NEW YORK, NY 10120

ARCHITECTURAL CONSTRUCTION SERVICES
DAVID L. BROOKS • MANAGING ARCHITECT
www.dcsai.com
P 714.436.9000
F 714.436.9035
Corporate Office
1320 Brioche Street
Costa Mesa, CA 92626

REVISIONS

NO.	DESCRIPTION	DATE

DATE:	03/12/07
SCALE:	AS SHOWN
GROSS AREA:	2,270 SQ. FT.
SALES AREA:	1,287 SQ. FT.
PROJECT # :	57284
DRAWN/CHECKED BY:	TP/BY

FOOTACTION USA

PROJECT TITLE
TYRONE SQUARE
SPACE 110
6901 Tyrone Square
St. Petersburg, FL 33710

STORE NO. 57284

SHEET TITLE
FINISH PLAN

SHEET NO. A3.0

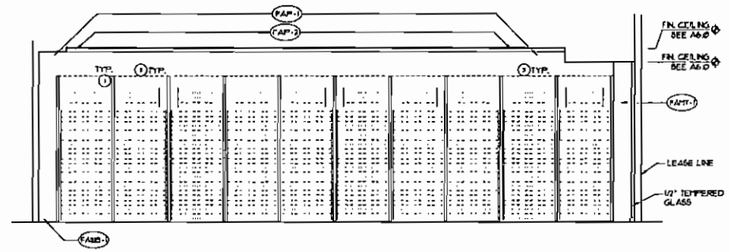

3 INTERIOR ELEVATION

SCALE: 1/4" = 1'-0"

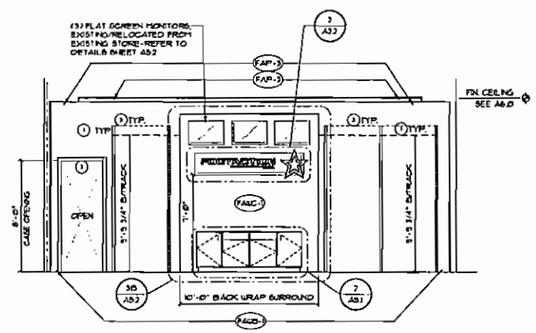

4 INTERIOR ELEVATION

SCALE: 1/4" = 1'-0"

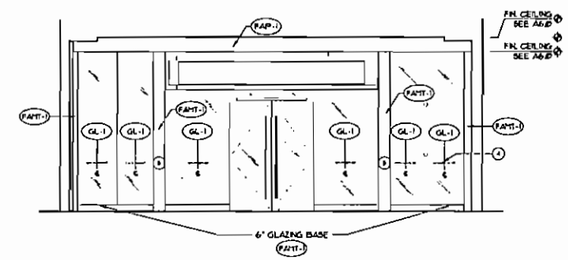

2 INTERIOR ELEVATION

SCALE: 1/4" = 1'-0"

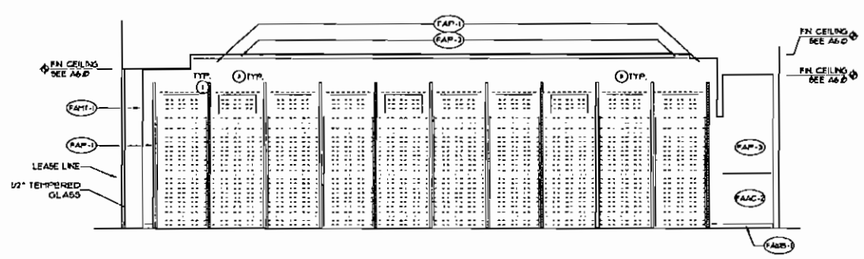

1 INTERIOR ELEVATION

SCALE: 1/4" = 1'-0"

ELEVATION KEY NOTES

1. CONTINUOUS OUTRIGGER WALL TRACK (REFER TO FIXTURE DETAILS). TRACK TO EXTEND 6" PAST END POST (TYP. EACH END). SEE 7/A5.1
2. CASED OPENING REFER TO CONSTRUCTION DETAILS. SEE 8/A1.2
3. PERIMETER WALL SYSTEM REFER TO FIXTURE DETAILS. SEE 7/A5.1
4. VINYL GRAPHICS REFER TO SIGNAGE DETAILS
5. BRAKE METAL ENCLOSURE REFER TO STOREFRONT DETAILS. SEE 3/A4/A2.1

TO ORDER PLANS GO TO WWW.LDIREPRO.COM

FOOT LOCKER, INC.

STORE PLANNING DEPT.
112 WEST 34TH STREET
NEW YORK, NY 10120

ARCHITECTURAL CONSTRUCTION SERVICES
DAVID L. ARANDA - MANAGING ARCHITECT
www.4acsl.com
P 714.435.9000
F 714.435.9055
Corporate Office
1522 Bristol Street
Costa Mesa, CA 92626

REVISIONS

NO.	DESCRIPTION	DATE

DATE:	03/12/07
SCALE:	AS SHOWN
GROSS AREA:	2,270 SQ. FT.
SALES AREA:	1,287 SQ. FT.
PROJECT # :	57284
DRAWN/CHECKED BY:	XX/XX

FOOTACTION USA

PROJECT TITLE
TYRONE SQUARE
SPACE 110
6901 Tyrone Square
St. Petersburg, FL 33710

STORE NO. 57284

SHEET TITLE
INTERIOR ELEVATIONS

SHEET NO. A4.0

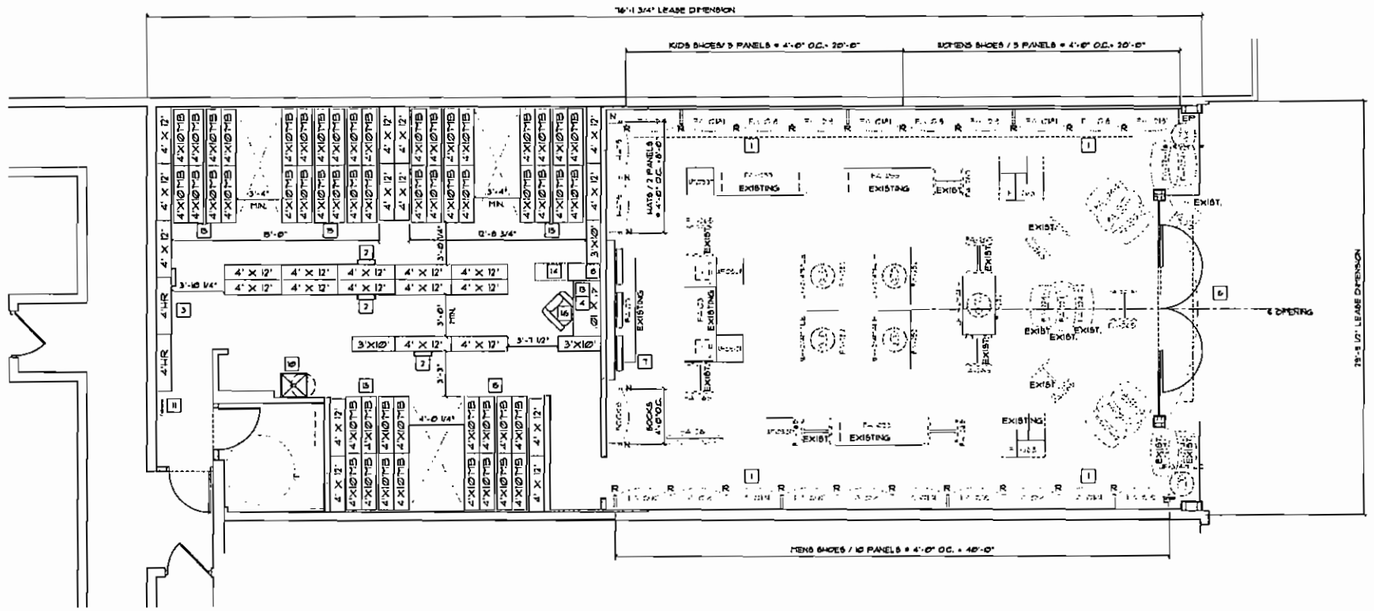

FIXTURE PLAN

SCALE: 1/4" = 1'-0"

STORE TABULATION

SQUARE FOOTAGE CALCULATIONS			
	SQ. FT.	SQ. FT. RATIO	CEILING HEIGHT
SALES AREA	1270	56%	12'-6"
STOCK AREA	880	39%	N/A
SUPPORT AREA	113	5%	VARIES
UN-UTILIZED AREA	---	---	
STOREFRONT FRONTAGE	79'-10"		
LEASABLE AREA	2263	100%	

STORE PAIRS TABULATION					
	SHELVING HEIGHT	LINEAR FT. OF SHELVING	PAIRS PER LINEAR FOOT	PAIRS	
REGULAR SHELF UNITS	12'-0"	112'	36	4,032	NUMBER OF PAIRS CALCULATED @ 36 PAIRS PER LINEAR FOOT FOR 12'-0" HIGH SHELVING.
HANGROD UNITS	12'-0"	8'			
MISCELLANEOUS UNITS	10'-0"	4'			NUMBER OF PAIRS CALCULATED @ 30 PAIRS PER LINEAR FOOT FOR 10'-0" HIGH SHELVING.
MOBILE SHELF UNITS	10'-0"	208'	30	6,240	
TOTALS		332'		10,272	TARGET PAIRS: 9,646

EQUIPMENT SCHEDULE

CODE	DESCRIPTION	REMARKS
1	WALL FIXTURE SYSTEM	REFER TO MANUFACTURER'S INSTALLATION GUIDE
2	STOCK SHELVING UNIT + ROLLING LADDERS	FURN BY TENANT INST. BY G.C.
3	HANG ROD UNIT + ROLLING LADDERS	FURN BY TENANT INST. BY G.C.
4	MANAGER DESK UNIT	FURN BY TENANT SEE ELECTRICAL SHEETS
5	NOT USED	
6	STOREFRONT FOOT LOCKER SIGN	FURN BY TENANT SEE SHEET A0.0
7	WIRELESS MODEM	INSTALL IN CASHWRAP, REFER TO E-DWGS.
8	FILE CABINET	FURN BY TENANT INST BY G.C
9	NOT USED	
10	MOP SINK	EXISTING
11	FIRE EXTINGUISHER	BY G.C. PER CODE + MOUNT AS DIRECTED BY FIRE DEPT.
12	1/8" PLEXIGLASS, FURN BY VENDOR INSTALLED BY G.C. MOUNT TO BACKSIDE OF STOCK FIXTURE	
13	VIDEO/AUDIO PLAYER	FURN BY TENANT INST. BY TENANT — REFER TO E DWGS
14	DRAWING STORAGE TUBE	NOT SHOWN — REFER TO 4/A5.1
15	MOBILE STOCK SHELVING	REFER TO MANUFACTURER'S INSTALLATION GUIDE
16	MANAGER'S CHAIR	FURN BY TENANT

NOTE: WHEN NEW STOCKROOM SHELVING IS SPECIFIED, THE TENANT G.C. IS TO ASSESS MAXIMUM ALLOWABLE SHELVING HEIGHT, MAINTAINING MIN. 24" CLEARANCE TO CLG ABOVE, AND REPORT TO FOOTLOCKER CONSTRUCTION MANAGER UPON COMMENCEMENT OF PROJECT.

FIXTURE SCHEDULE

FIXTURE SYMBOL	CODE	QTY.	FIXTURE NAME
	FA-0116	21	PERIMETER OUTRIGGER POST (9 NEW / 12 RELOCATED EXIST.)
	FA-0161	20	DADO WALL PANEL (12 NEW / 8 RELOCATED EXIST.)
	FA-0169 / FA-0166	--- / 3	APPAREL WALL PANEL / END PANEL (EXISTING)
	FA-055	3	BENCH WITH LEVELER (EXISTING)
	FA-103	1	FA CASHWRAP UNIT (EXISTING)
	FA-109	1	FA BACKWRAP UNIT (EXISTING)
	FA-224-1	5	LARGE SHOE TABLE (3 NEW / 2 EXISTING)
	FA-224-3	8	SMALL SHOE TABLE (5 NEW / 3 EXISTING)
	UP0532	4	SOCK BINS
	FA-252	5	FA 3 TIER DAT TABLE (2 NEW / 3 EXISTING)
	FA-363	10	FA 7-WAY FIXTURE (2 NEW / 8 EXISTING)

FIXTURE SYMBOL	CODE	QTY.	FIXTURE NAME
	FA-763	2	FA 4 WAY FIXTURE (1 NEW / 1 EXISTING)
	FA-767	1	FA HAT FIXTURE (NEW)
	FA-215	1	LEANE LINE SIGN HOLDER (EXISTING)
	UP-MPMLE	7	BUST FORM W/ TABLE W/ STAND (10 PER UNIQUE / 10 PER BAY (2 NEW / 4 EXISTING)
	FA-201	---	FITTING ROOM DOOR + JAMB (SEE DOOR SCHEDULE)
	FA-209	---	FITTING RM. HOOK PANEL
	FA-203	---	ACCESSIBLE FITTING ROOM BENCH
	UFC051	2	ROLLING RACK (EXISTING) (NOT SHOWN ON PLANS)
	UFSFR	2	SALE FOOTWEAR RACK (NOT SHOWN ON PLANS) (EXISTING)
	UT360	1	ROLLING GRAPHICS SIGN (NOT SHOWN ON PLANS) (EXISTING)

TO ORDER PLANS GO TO WWW.LDIREPRO.COM

FOOT LOCKER, INC.

STORE PLANNING DEPT.
112 WEST 34TH STREET
NEW YORK, NY 10120

ARCHITECTURAL CONSTRUCTION SERVICES
DAVID L. ROBBS - RANDALL ARCHITECT
www.dcsai.com
P 714.436.9000
F 714.436.9033
Corporate Office
1883 Brioche Street
Costa Mesa, CA 92626

REVISIONS

NO.	DESCRIPTION	DATE

DATE:	03/12/07
SCALE:	AS SHOWN
GROSS AREA:	2,270 SQ. FT.
SALES AREA:	1,287 SQ. FT.
PROJECT # :	57284
DRAWN/CHECKED BY:	TP/BY

FOOTACTION USA

PROJECT TITLE
TYRONE SQUARE
SPACE 110
6901 Tyrone Square
St. Petersburg, FL 33710

STORE NO. 57284

SHEET TITLE
FIXTURE PLAN

SHEET NO. A5.0

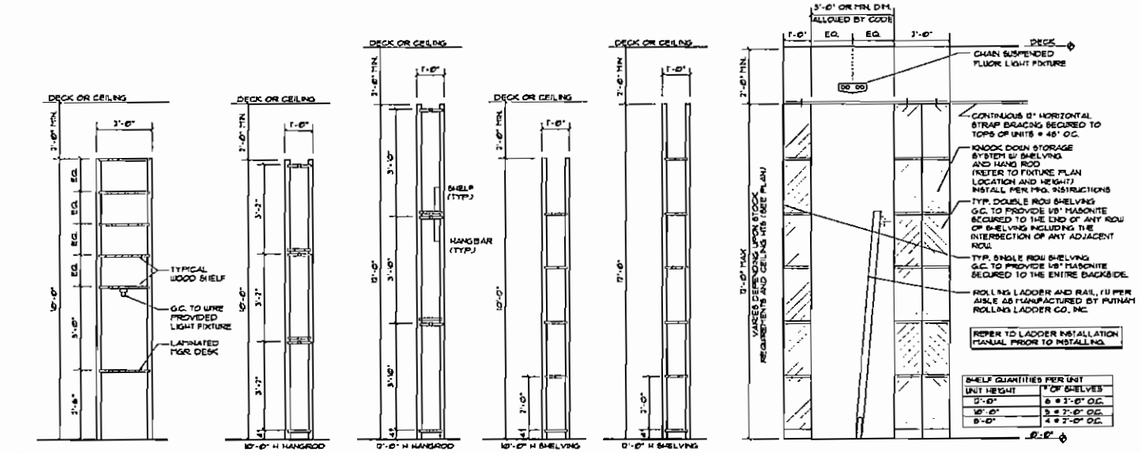

8D SECTION- MGR. DESK

8C SECTION HANGROD UNIT

8B SECTION AT SHELF UNIT

8A TYP. SECTION AT SHELVING UNITS

NOTE: REFER TO FIXTURE PLAN FOR STOCK SHELVING UNIT SIZES, QUANTITY AND CONFIGURATION. G.C. TO INSTALL PER MANUFACTURERS INSTRUCTIONS.

8 STOCK SHELVING DETAILS

SCALE: 3/4"=1'-0"

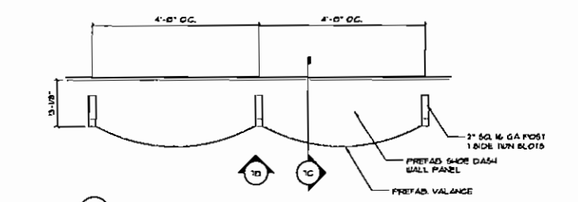

7A PLAN

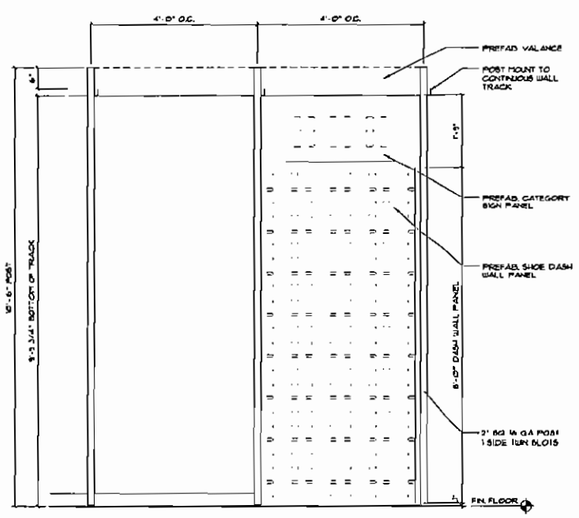

7B FRONT ELEVATION

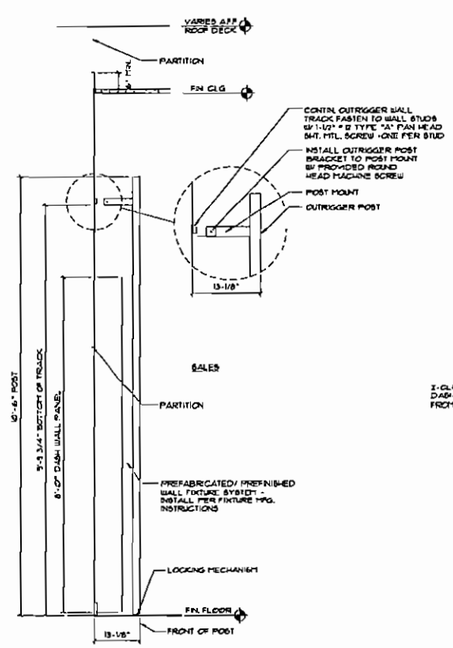

7C SECTION

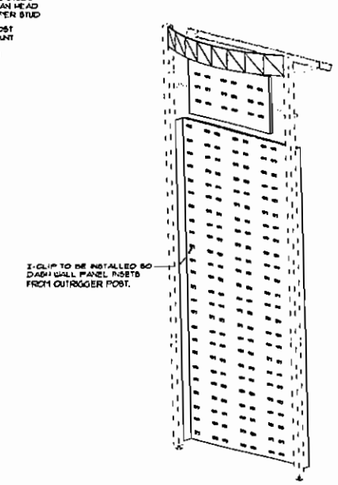

7D ISOMETRIC DETAIL

7 WALL SYSTEM DETAILS

SCALE: 3/4"=1'-0"

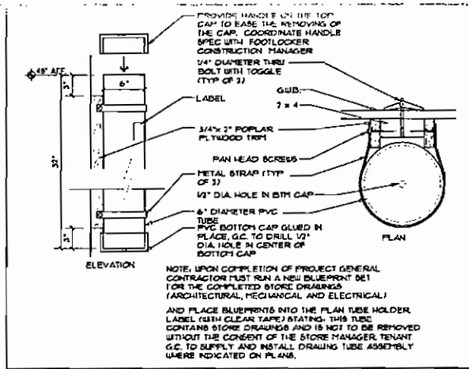

NOTE: UPON COMPLETION OF PROJECT GENERAL CONTRACTOR MUST RUN A NEW BLUEPRINT SET FOR THE COMPLETED STORE DRAWINGS (ARCHITECTURAL, MECHANICAL AND ELECTRICAL)

AND PLACE BLUEPRINTS INTO THE PLAN TUBE HOLDER. LABEL (WITH CLEAR TAPE) STATING: THIS TUBE CONTAINS STORE DRAWINGS AND IS NOT TO BE REMOVED WITHOUT THE CONSENT OF THE STORE MANAGER. TENANT G.C. TO SUPPLY AND INSTALL DRAWING TUBE ASSEMBLY WHERE INDICATED ON PLANS.

6 DRAWING TUBE DETAILS

SCALE: 1 1/2"=1'-0"

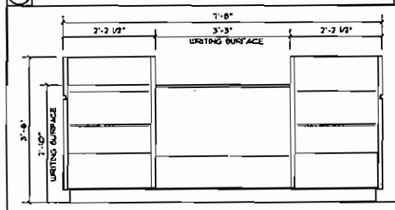

5 CASHWRAP REAR ELEVATION

SCALE: 3/4"=1'-0"

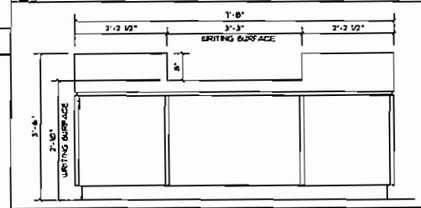

4 CASHWRAP FRONT ELEVATION

SCALE: 3/4"=1'-0"

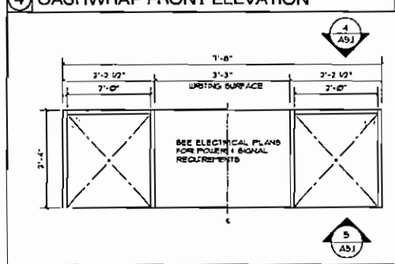

3 CASHWRAP PLAN

SCALE: 3/4"=1'-0"

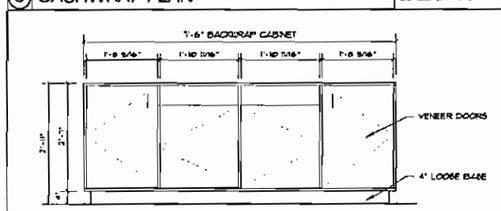

2 BACKWRAP FRONT ELEVATION

SCALE: 3/4"=1'-0"

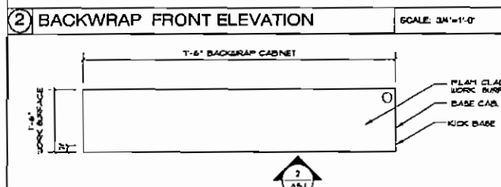

1 BACKWRAP PLAN

SCALE: 3/4"=1'-0"

TO ORDER PLANS GO TO WWW.LDIREPRO.COM

FOOT LOCKER, INC.

STORE PLANNING DEPT.
112 WEST 34TH STREET
NEW YORK, NY 10120

ARCHITECTURAL CONSTRUCTION SERVICES
DAVID A. DOWDY • MANAGING ARCHITECT
www.dacsl.com
T 714.436.9000
F 714.436.9035
Corporate Office
1333 Bristol Street
Costa Mesa, CA 92626

REVISIONS

NO.	DESCRIPTION	DATE

DATE:	03/12/07
SCALE:	AS SHOWN
GROSS AREA:	2,270 SQ. FT.
SALES AREA:	1,287 SQ. FT.
PROJECT # :	57284
DRAWN/CHECKED BY:	XX/XX

FOOTACTION USA

PROJECT TITLE
TYRONE SQUARE
SPACE 110
6901 Tyrone Square
St. Petersburg, FL 33710

STORE NO. 57284

SHEET TITLE
FIXTURE SECTIONS & DETAILS

SHEET NO. A5.1

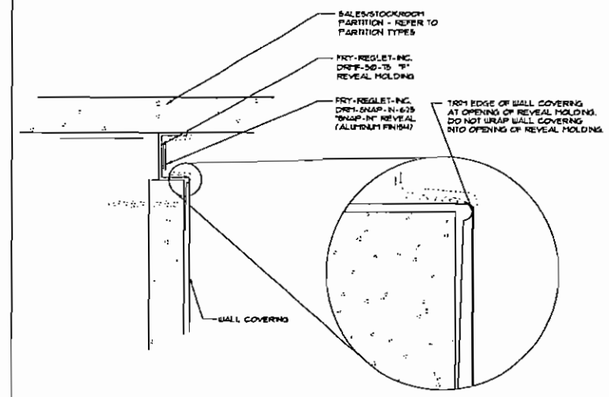

3 REVEAL DETAIL — SCALE: 1"=1'-0"

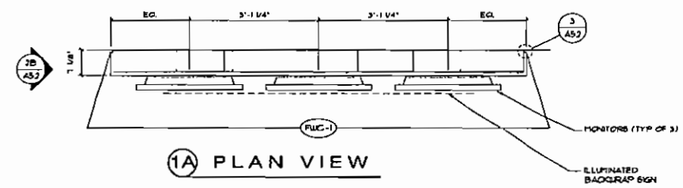

1A PLAN VIEW

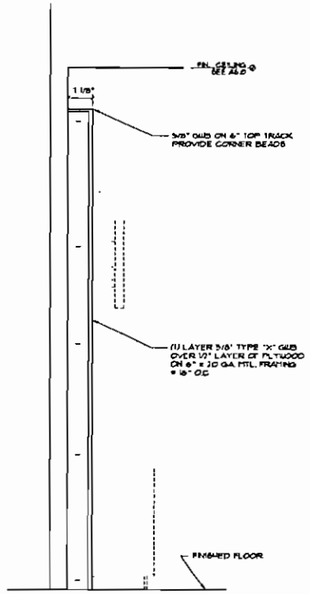

2A SECTION

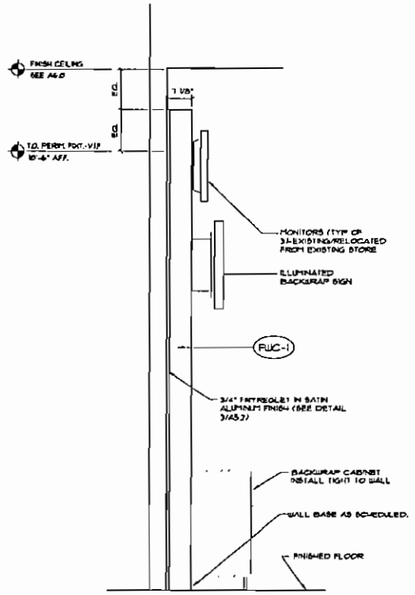

2B SIDE ELEVATION

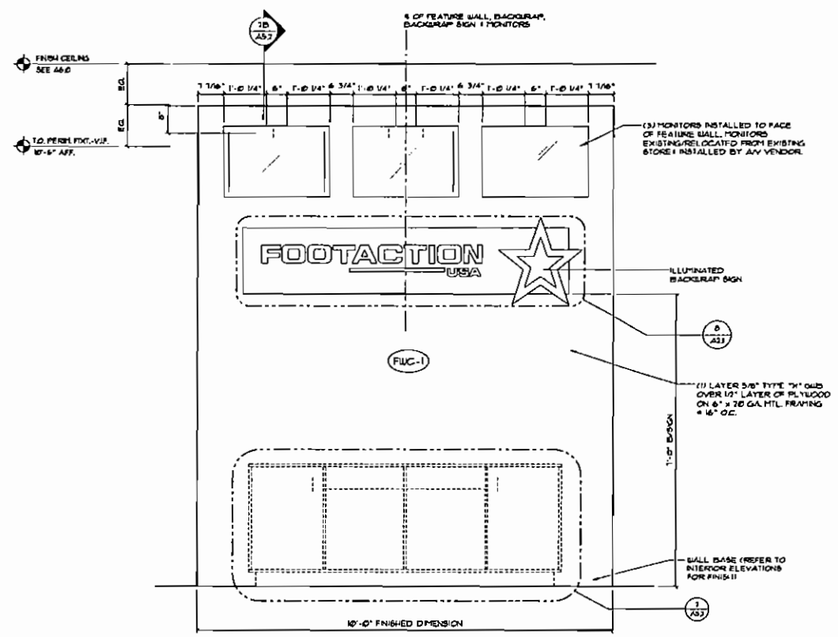

1B FRONT ELEVATION

2 BACKWRAP FEATURE SIDE ELEVATION & SECTION — SCALE: 3/4"=1'-0"

1 BACKWRAP FEATURE WALL PLAN & ELEVATION — SCALE: 3/4"=1'-0"

TO ORDER PLANS GO TO WWW.LDIREPRO.COM

FOOT LOCKER, INC.

STORE PLANNING DEPT.
112 WEST 34TH STREET
NEW YORK, NY 10120

ARCHITECTURAL CONSTRUCTION SERVICES
DAVID L. RHODES - MANAGING ARCHITECT
www.dacsl.com
P 714.435.9000
F 714.436.9033
Corporate Office
1133 Imperial Street
Costa Mesa, CA 92626

REVISIONS

NO.	DESCRIPTION	DATE

DATE:	03/12/07
SCALE:	AS SHOWN
GROSS AREA:	2,270 SQ. FT.
SALES AREA:	1,287 SQ. FT.
PROJECT # :	57284
DRAWN/CHECKED BY:	TP/BY

FOOTACTION USA

PROJECT TITLE
TYRONE SQUARE
SPACE 110
6901 Tyrone Square
St. Petersburg, FL 33710

STORE NO. 57284

SHEET TITLE
BACKWRAP FEATURE WALL DETAILS

SHEET NO. A5.2

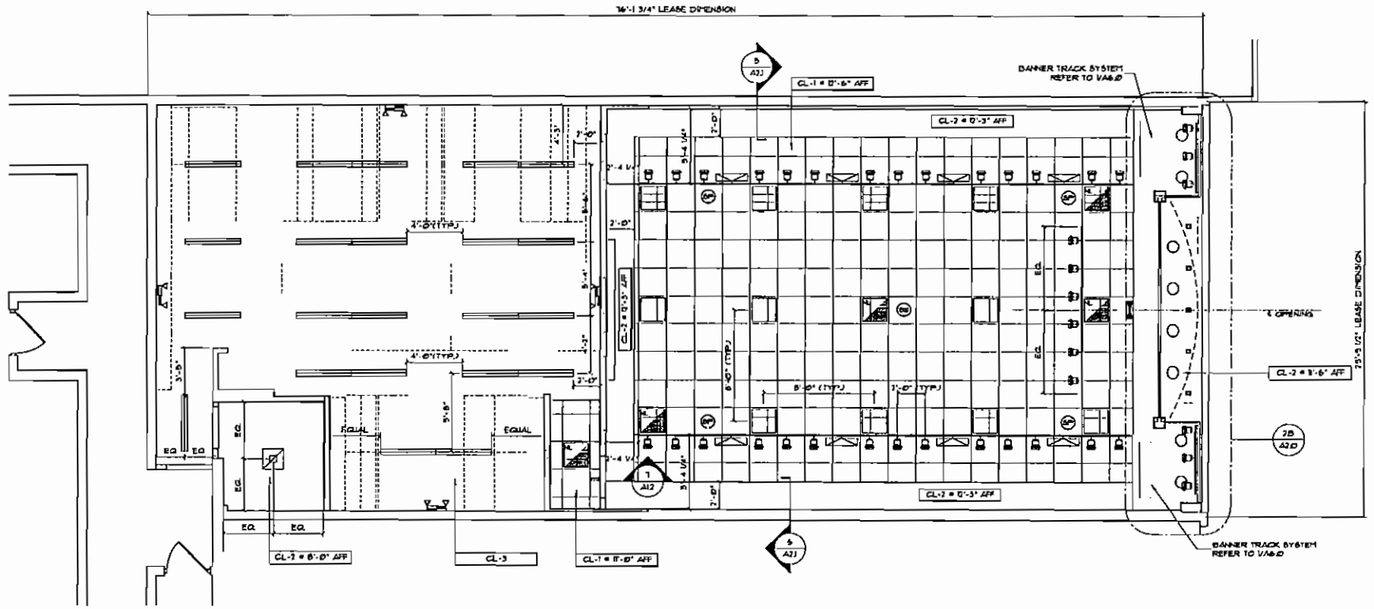

REFLECTED CEILING PLAN

SCALE: 1/4" = 1'-0"

1. EMERGENCY LIGHTS TO BE INSTALLED ON SEPARATE CIRCUIT.

2. SMOKE/HEAT DETECTOR SPACING SHALL COMPLY WITH THE REQUIREMENT OF NFPA 72. THE INSTALLING CONTRACTOR SHALL SUBMIT A CEILING PLAN SHOWING THE LOCATION OF THE DETECTORS TO THE FIRE MARSHALL FOR APPROVAL BEFORE STARTING WORK, IF REQUIRED BY LOCAL AUTHORITIES.

3. REFER TO FINISH SCHEDULE SPEC + INTERIOR ELEVATIONS FOR FINISHING + PAINTING REQUIREMENTS.

4. THE POSITION OF THE TRACK IS TYPICALLY SET OUT FROM PERIMETER WALL AS INDICATED.

5. UPON COMPLETION OF JOB, CONTRACTOR SHALL BALANCE THE AIR AND SUBMIT CERTIFIED COPY OF AIR BALANCE REPORT TO THE TENANTS PROJECT MANAGER

6. G.C. TO ADVISE TENANT PROJECT MANAGER OF MAX CLEAR HEIGHT IN STOCK ROOM PRIOR TO PROJECT COMMENCING. THIS IS TO ALLOW THE HEIGHT OF THE STOCK ROOM SHELVING TO BE MAXIMIZED

7. G.C. SHALL FIELD EXAMINE THE CONDITION OF EXISTING TENANT DEMISING PARTITIONS + EXTERIOR GLAZING WALLS AND PROVIDE FULL HEIGHT + FINISHED PARTITION TO UNDERSIDE OF ROOF DECK AS REQUIRED. ALL EXPOSED PARTITIONS AT SALES AREA MUST BE TAPED, SPACKLED AND PAINTED IN THEIR ENTIRETY.

FIRE SPRINKLER SYSTEM:
EXISTING SPACE FIRE SPRINKLER SYSTEM TO BE MODIFIED PER NEW TENANT SPACE DRAWINGS AS REQUIRED BY NFPA STANDARDS AND LOCAL CODES. ALL AREAS TO BE ORDINARY HAZARD GROUP II OCCUPANCY WITH FIRE SPRINKLER FABRICATION DRAWINGS TO BE SUBMITTED BY TENANT FIRE PROTECTION CONTRACTOR TO BUILDING DEPARTMENT BEFORE WORK COMMENCES. ALL SPRINKLER HEADS SHALL BE SEMI-RECESSED CHROME TYPE CENTERED IN 2X2 CEILING GRID. SPRINKLER HEADS - NOTE: SYMETRICAL PATTERN TO ALIGN W/ CEILING ELEMENTS.

REFLECTED CEILING PLAN NOTES

CEILING TYPE SCHEDULE

CALLOUT	DESCRIPTION
CL-1	7" x 1' NON-DIRECTIONAL ACOUST. TILE: ARMSTRONG FINE FISSURED MEDIUM TEXTURE #933, ANGLED TEGULAR EDGE, FIRE GUARD CLASS 'A'. PANEL ON NEW PRELUDE 15/16" EXPOSED TEE GRID + HEIGHT INDICATED ON PLANS. HAIR FELT CEILING INSTALLED BY TENANT G.C.
CL-2	5/8" TYPE 'X' GYPSUM ON FTL. JOISTS AT HEIGHT INDICATED ON PLAN. TAPE, SPACKLE, SAND, SMOOTH AND PAINT. ONE COAT SEALER, TWO COATS FINISH PER FINISH PLAN FURNISH + INSTALL BY TENANT G.C.
CL-3	EXISTING EXPOSED STRUCTURAL DECK. NO NEW CEILING UNLESS MANDATED BY FIRE MARSHAL OR BLDG CODES

NO COMBUSTIBLE MATERIALS ARE ALLOWED TO BE INSTALLED ABOVE ANY FINISHED CEILING.

LIGHT FIXTURE SCHEDULE

TYPE	SYMBOL	MANUFACTURER	DESCRIPTION
F1		MERCURY	M1137STOTELD - 8' - 1 LITE TANDEM FLUORESCENT STRIP W/ PAL 4STBC CRUSH GUARD SAFETY SLEEVE + PAL TB CAP
F1-4		MERCURY	M1137OCTELED - 4' - 1 LITE TANDEM FLUORESCENT STRIP W/ PAL 4STBC CRUSH GUARD SAFETY SLEEVE + PAL TB CAP
F2		MERCURY	9-4E340-DIAX-3-ELB 2X2 PARABOLIC ELECTRONIC BALLAST RECESSED FIXTURE
F2/EM		MERCURY	9-4E340-DIAX-3-ELB/EM NIGHT/EMERGENCY LIGHT 2X2 PARABOLIC ELECTRONIC BALLAST RECESSED FIXTURE
RD		JUNO	CHB-226Q, 650CWI 2-26W COMPACT FLUORESCENT DOWNLIGHT
A4		LIGHTOLIER	9673GH - CLASSIC BASIC PAR 30 RING-MATTE WHITE
TF2		LIGHTOLIER	6175ENSWH LYTEFLOOD L40 COMPACT FLUORESCENT
TF		LIGHTOLIER	LYTEOPAN TRACK SYSTEM 8' LTH, 6' LTH, 4' LTH, 2' LTH — SPRING LOADED ATTACHMENT MOUNT DIRECTLY TO LAY-IN CEILING
EF		BROAN	BROAN 70-75 RECESSED 70 CFM FAN/LIGHT UNIT WITH (1) 100 W BULB

TYPE	LAMP
F1	F8T5/TB/30 30W T8 FLUORESCENT LAMP
F1-4	F4T5/TB/30 30W T8 FLUORESCENT LAMP
F2	F42DBX/SP/30 40W BIAX LAMP
F2/EM	F42DBX/SP/30 40W BIAX LAMP
RD	CFM13TE/E/30 13 WATT COMPACT FLUOR.
A4	35MR16/CP/FL 35W PAR 30 NARROW FLOOD
TF2	F42DBX/SP/30 40W BIAX LAMP
TF	
EF	

TYPE	SYMBOL	MANUFACTURER	DESCRIPTION
SS	SS	JBL	SJ-1: 8x25 WOOFER
SP	SP	JBL	SJ-2: SPEAKER
E1		JUNO	EXR50-WH EXIT LIGHT W/ BATTERY PACK
E2		JUNO	EL14 SURFACE MOUNTED EMERGENCY LIGHT MOUNTED AT 8'-6" AFF OR MAX ALLOWABLE BY CODE
SD	SD		SMOKE DETECTOR — SUPPLIED AND INSTALLED BY TENANT'S G.C.
			BANNER TRACK SYSTEM

EX = EXISTING LIGHT TO REMAIN - VERIFY EXISTING QUANTITIES RE = EXISTING LIGHT TO BE RELOCATED - VERIFY EXISTING QUANTITIES NL = DENOTES NIGHT/EMERGENCY LIGHT

A- INSTALL BANNER TRACK SYSTEM WHERE INDICATED ON PLANS PER MANUFACTURES INSTRUCTIONS

B- REFER TO PLANS FOR SIZE AND LOCATIONS. TRACK IS SUPPLIED IN 8'-0" LENGTHS AND CUT IN FIELD AS REQUIRED TO ACHIEVE SPECIFIED LENGTH. PAINT ANY CUT ENDS WHITE

C- INSTALL MOUNTING HARDWARE 24" O.C. MAX. AND WITHIN 12" OF ENDS

D- AT GYB CEILINGS INSTALL TRACK W/TOGGLE BOLTS AT MAX 24" O.C.

BANNER TRACK NOTES

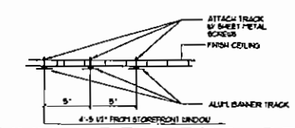

1 BANNER TRACK DETAIL

SCALE: 1 1/2"=1'-0"

TO ORDER PLANS GO TO WWW.LDTREPRO.COM

FOOT LOCKER, INC.

STORE PLANNING DEPT.
112 WEST 34TH STREET
NEW YORK, NY 10120

ARCHITECTURAL CONSTRUCTION SERVICES
DAVID A. SHOOK - MANAGING ARCHITECT
www.dacs1.com
P 714.438.9000
F 714.438.9033
Corporate Office
5122 Bolsa Ave
Huntington Beach, CA 92649

REVISIONS

NO.	DESCRIPTION	DATE

DATE:	03/12/07
SCALE:	AS SHOWN
GROSS AREA:	2,270 SQ. FT.
SALES AREA:	1,287 SQ. FT.
PROJECT # :	57284
DRAWN/CHECKED BY:	TP/BY

FOOTACTION USA

PROJECT TITLE
TYRONE SQUARE
SPACE 110
6901 Tyrone Square
St. Petersburg, FL 33710
STORE NO. 57284

SHEET TITLE
REFLECTED CEILING PLAN

SHEET NO. A6.0