To Order Plans go to www.ldiline.com

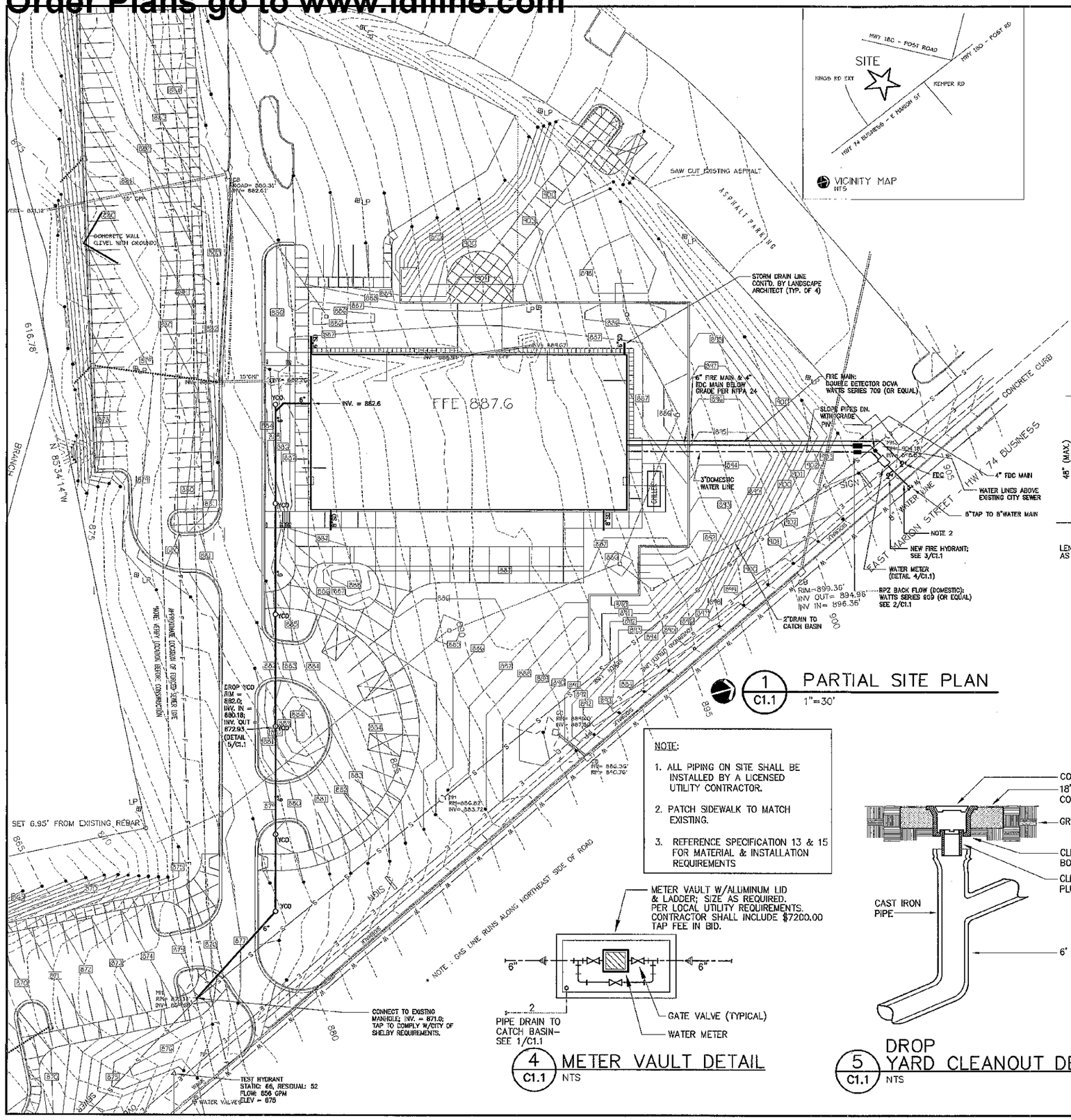

1 C1.1 PARTIAL SITE PLAN
1"=30'

NOTE:

1. ALL PIPING ON SITE SHALL BE INSTALLED BY A LICENSED UTILITY CONTRACTOR.
2. PATCH SIDEWALK TO MATCH EXISTING.
3. REFERENCE SPECIFICATION 13 & 15 FOR MATERIAL & INSTALLATION REQUIREMENTS

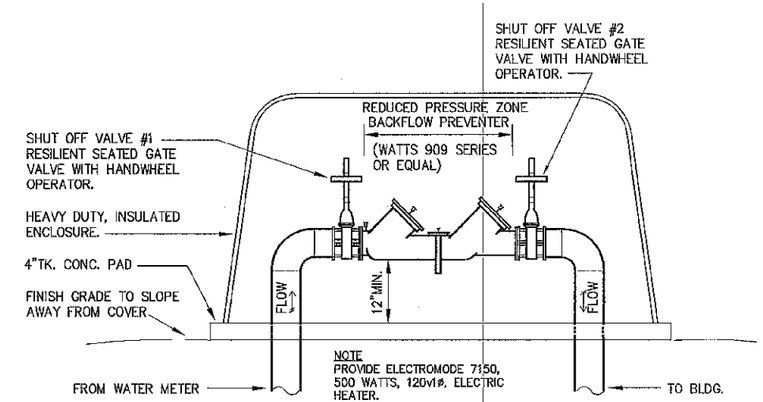

2 C1.1 RPZ ABOVE GROUND VALVE ASSEMBLY DETAIL
NTS (DOMESTIC WATER)

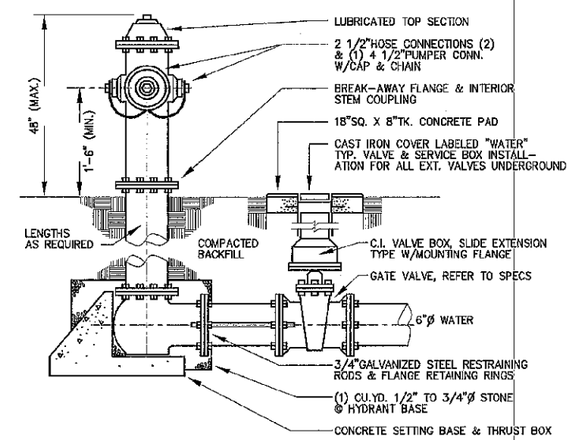

3 C1.1 FIRE HYDRANT DETAIL
NTS

NOTES

1. FIRE HYDRANT SHALL HAVE A 6"ø MECHANICAL JOINT OR BELL CONNECTION. THE HYDRANT SHALL BE DESIGNED FOR 150 PSI WORKING PRESSURE. WORKING PARTS SHALL BE BRONZE, HOSE THREADS TO BE NATIONAL STANDARD METER PIPES. HYDRANT TO BE PAINTED WITH ONE COAT RED LEAD PAINT & TWO COATS FINISH ENAMEL. HYDRANT TO BE DRY BARREL TYPE CONFORMING TO THE AMERICAN WATER WORKS ASSOCIATION STANDARD C-502 WITH VALVE OPENING AT LEAST 4½"ø. HYDRANT SHALL MATCH EXISTING.

2. CONTRACTOR SHALL VERIFY THAT THE THREADS FOR THE HOSE & PUMPER CONNECTION WILL ACCOMODATE THE EQUIPMENT OF THE CITY FIRE DEPARTMENT.

4 C1.1 METER VAULT DETAIL
NTS

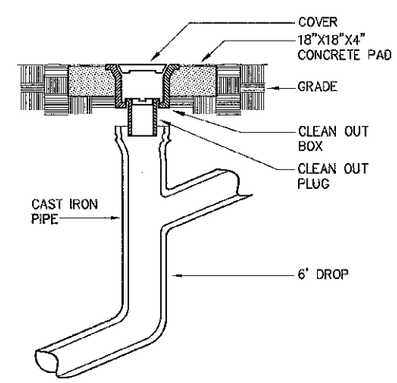

5 C1.1 DROP YARD CLEANOUT DETAIL
NTS

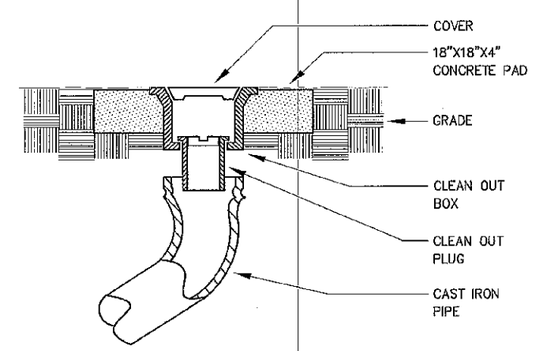

6 C1.1 YARD CLEANOUT DETAIL
NTS

DCC# 1287
SCO ID# 01-05615-01A

CONSULTANT
McKNIGHT • SMITH • WARD • GRIFFIN
ENGINEERS, INCORPORATED
PO Box 240820 - 4223 South Boulevard
Charlotte, NC - 704/527-2112

HOLLAND HAMRICK & PATTERSON
ARCHITECTS, P.A.
222 NORTH LAFAYETTE ST. SUITE 21
SHELBY, NORTH CAROLINA 28150
hhparch@bellsouth.net
(704) 487-8578
fax (704) 487-8579
AIA

PROJECT TITLE
ALLIED HEALTH BUILDING for CLEVELAND COMMUNITY COLLEGE
SHELBY, NORTH CAROLINA

COMM. NO. 2037
DATE 06-09-06
REVISED

SHEET
C1.1
1 OF 1

EDA PROJECT NO. 04-01-05818